BY ORDER OF THE SECRETARY OF THE AIR FORCE

AIR FORCE OCCUPATIONAL SAFETY AND HEALTH STANDARD 91-501

16 SEPTEMBER 2002

Safety

AIR FORCE CONSOLIDATED OCCUPATIONAL SAFETY STANDARD

NOTICE: This publication is available digitally on the AFDPO WWW site at: **http://www.e-publishing.af.mil.**

OPR: HQ AFSC/SEGS (Thomas M. Pazell)
Supersedes AFOSH Standards 91-2, 91-12, 91-22, 91-31, 91-43, 91-44, 91-45, 91-56.

Certified by: HQ AFSC/SEG (John W. Russell JR)
Pages: 357
Distribution: F

This consolidation of Air Force Occupational Safety and Health standards implements Air Force Policy Directive (AFPD) 91-3, *Occupational Saf ety and Health*. Major Commands (MAJCOM), direct reporting units (DRU), and field operating agencies (FOA) may supplement this standard when additional or more stringent safety, fire protection, and health criteria is required. Lower-level organizations, installation and above, may also supplement this standard. MAJCOMs will approve these supplements. Refer to Air Force Instruction (AFI) 91-301, *Air Force Occupational and Environmental Safety, Fire Protection, and Health (AFOSH) Program*, for instructions on submitting requests for variance to requirements of this standard. Report conflicts in guidance between this standard, federal standards, or other Air Force directive in writing through MAJCOM, DRU, or FOA ground safety offices to Headquarters Air Force Safety Center, Ground Safety Division, Safety Engineering and Standards Branch (HQ AFSC/SEGS), 9700 G Avenue SE, Suite 222D, Kirtland AFB NM 87117-5670. Records Disposition. Ensure that all records created by this AFOSH Standard are maintained and disposed of IAW AFMAN 37-139, "*Records Disposition Schedule*."

This standard defines the Air Force's minimum safety, fire protection, and occupational health standards. This publication applies to all US Air Force organizations, US Air Force Reserve Command (AFRC) units and all Air National Guard personnel, with the exception of state employees. This standard implements parts of Occupational Safety and Health Administration (OSHA) 29 Code of Federal Regulations (CFR), and includes additional requirements not addressed by the OSHA standard. Not included are safety, fire prevention, and occupational health requirements addressed in specific equipment technical orders (TO).

No T.O., AFOSH Standard, or Operating Instruction can possibly address every hazard or potential hazard that may arise from a specific task or combination of tasks. Where situations exist that are not covered by existing directives, use an Operational Risk Management (ORM) process to assess risk associated with those situations and determine adequate safeguards or procedures to manage the risk. **NOTE: The ORM process may not be used to violate directives or other regulatory guidance. Normal waiver or variance procedures must be followed in all cases (refer AFI 91-301).**

SUMMARY OF REVISIONS

This document is substantially revised and must be completed reviewed. This document is the first part in a three phase consolidation of the 91 – series AFOSH Standards. The focus of the consolidation of the Air Force Occupational Safety and Health Standards (91- series) is to provide all personnel with the latest state of the art AFOSH standards to date. The consolidation of the 91-series AFOSH Standards will allow for a web accessible, and searchable tool for the entire Air Force. This consolidation will update all 91-series AFOSH standards, and allow for individual standards to become chapters thus reducing repetition.

This document supercedes AFOSH Standards: 91-2, *Vehicle-Mounted Elevating and Rotating Work Platform, Manually-Propelled and Self-Propelled Mobile Work Platforms, and Scaffolds (Towers),* 91-12, *Machinery,* 91-22, *Walking Surfaces, Guarding Floor and Wall Openings,* 91-31, *Personal Protective Equipment,* 91-32, *Emergency Shower and Eyewash Units,* 91-43, *Flammable and Combustible Liquids,* 91-44, *Safety Color Coding, Labeling, and Marking For Piping Systems,* 91-45, *Hazardous Energy Control and Mishap Prevention Signs and Tags,* 91-46, *Materials Handling and Storage Equipment,* 91-56, *Fire Protection and Prevention,* 91-66, *General Industrial Operations* (in part).

This document will make reference to 91 – series AFOSH Standards which will be incorporated into Part II and Part III of the consolidation. For continuing updates on the progress of this consolidation please visit our web site at **http://safety.kirtland.af.mil/AFSC/RDBMS/Ground/seg_library.htm**, and scroll down to AF Occupational Safety and Health Standards (AFOSH).

Chapter 1— INTRODUCTION **12**

1.1. Purpose: 12

1.2. How to Use This Document 12

1.3. Responsibilities: 13

1.4. Job Safety Analysis (JSA). 14

1.5. Occupational Safety and Health Administration (OSHA) Requirements 15

1.6. National Consensus Standards 15

Figure 1.1. Job Safety Analysis Guide. 16

Chapter 2— HUMAN FACTORS **18**

2.1. Human Factors. 18

2.2. Responsibilities. 18

Chapter 3— PHYSICAL HAZARDS **19**

3.1. Hazards. 19

3.2. Responsibilities: 19

Chapter 4— MANUAL MATERIAL HANDLING AND LIFTING TECHNIQUES 21

4.1. Hazards and Human Factors: 21

4.2. Manual Handling. 21

4.3. Lifting and Carrying. 21

4.4. Training. 21

4.5. Minimizing Manual Material Handling Hazards: 22

4.6. Proper Lifting Methods. 22

Figure 4.1. How to Lift Properly. 23

4.7. Carrying Methods. 24

4.8. Carrying Items Up or Down Stairways: 24

4.9. Manual Material Handling Equipment. 24

4.10. Inspection of Materials. 27

4.11. Personal Protective Equipment (PPE). 27

4.12. Inspection and Maintenance of Manual Handling Equipment (MHE): 28

4.13. Other Safety Requirements: 28

Figure 4.2. Manual Material Handling and Lifting Techniques Checklist. 29

Chapter 5— HOUSEKEEPING 31

5.1. Floors and Walking Surfaces. 31

5.2. Scraps and Combustible Waste. 31

5.3. Packing Supplies. 31

5.4. Electric Buffing Machines. 31

5.5. Walls and Ceilings. 31

5.6. Stacking Materials. 31

5.7. Lighting Fixtures. 31

5.8. Trash: 31

Figure 5.1. Housekeeping Checklist. 33

Chapter 6— FIRE PROTECTION 34

6.1. Hazards: 34

6.2. General Requirements: 35

Figure 6.1. Fire Protection and Prevention Checklist. 42

Chapter 7— WALKING SURFACES, GUARDING FLOOR AND WALL OPENINGS, FIXED INDUSTRIAL STAIRS, AND PORTABLE AND FIXED LADDERS 43

7.1. General Information. 43

7.2. Hazards and Human Factors associated with Walking and Working Surfaces 43

7.3. Requirements: 43

7.4. Fixed Industrial Stairs and Ramps: 48

7.5. Fixed Ladders. NOTE: 51

7.6. Portable Ladders: 53

7.7. Additional Requirements for Stepladders: 58

Table 7.1. Uniform Combination of Stairway Rise and Tread Dimension. 59

Table 7.2. Ramp Installation Dimension. (NFPA 101, Life Safety Code, Ramps, Classification). 59

Table 7.3. ANSI Standard on Ladders. 59

Table 7.4. Ladders Workload Ratings. 60

Table 7.5. Minimum Overlap for Two-Section Extension Ladders. 60

Figure 7.1. Walking Surfaces, Guarding Floor Openings Wall Opening, Fixed Industrial Stairs, and Portable and Fixed Ladders. 61

Chapter 8— ELECTRICAL SAFETY 67

8.1. Hazards. 67

8.2. Electrical Installation and Equipment. 67

8.3. Receptacles. 67

8.4. Plugs. 67

8.5. Flexible Cords and Extension Cords. 67

8.6. Disconnecting Means, (Circuit Breakers and Disconnect Switches). 68

8.7. Guarding of Live Parts. 69

8.8. Equipment Grounding: 69

8.9. Restrictions. 69

8.10. Electrical Installations and Equipment: 69

8.11. Additional Electrical Equipment Requirements: 70

8.12. Electronic Equipment. 70

8.13. Emergency Equipment (Electrical Safety Boards). 71

8.14. Automated External Defibrillator (AED): 72

8.15. Illumination. 72

8.16. Moisture Guarding. 72
8.17. Undervoltage Protection. 72
8.18. Control Switches. 72
Figure 8.1. Electrical Safety Checklist. 74

Chapter 9— JEWELRY **76**
9.1. Finger Rings: 76
9.2. Other Jewelry. 76
Figure 9.1. Jewelry Safety Checklist. 77

Chapter 10— OFFICE SAFETY **78**
10.1. General Information. 78
10.2. Hazards and Human Factors: 78
10.3. Responsibilities. 78
10.4. Basic Office Safety Procedures: 79
10.5. Office Ergonomics. 79
10.6. Lifting Requirements. 80
10.7. General Office Equipment: 80
10.8. Working with Video Display Terminals (VDT) 81
10.9. Elevators: 82
10.10. Storage: 83
10.11. Lighting. 83
10.12. Facility managers: 83
10.13. Pest Control. 83
10.14. Noise: 83
10.15. Temperature. 84
10.16. Personal Protective Equipment (PPE). 84
10.17. Training: 84
Figure 10.1. Office Safety Checklist. 85

Chapter 11— ADVERSE WEATHER **87**
11.1. Responsibilities: 87
11.2. General Lightning Safety for all AF Activities and operations: 87
Figure 11.1. Adverse Weather Safety Checklist. 89

Chapter 12— HAND TOOL AND PORTABLE POWER TOOLS **90**

12.1. Hazards and Human Factors: 90

12.2. Tool Procurement: 90

12.3. General Requirements: 90

12.4. Nonpowered Hand Tools. 91

12.5. Powered Portable Hand Tools. 94

12.6. Personal Protective Clothing and Equipment: 99

Figure 12.1. Hand and Tools and Portable Tools Safety Checklist. 100

Chapter 13— FALL PROTECTION **103**

13.1. General Requirements. 103

13.2. Personal Fall Arrest Systems (PFAS). 104

13.3. For fall protection on aircraft surfaces, see AFOSH Standard 91-100, *Aircraft Flight Line – Ground Operation & Activities.* 107

Figure 13.1. Fall Protection Checklist. 108

Chapter 14— PERSONAL PROTECTIVE EQUIPMENT (PPE) **111**

14.1. General Information: 111

14.2. Hazards: 111

14.3. Job Safety Analysis (JSA). 112

14.4. Responsibilities: 112

14.5. General Requirements: 114

14.6. Specific Requirements: 125

Table 14.1. Rubber Insulating Equipment Voltage Requirements. 127

Table 14.2. Alternating Current (AC) Prooftest Requirements. 128

Table 14.3. Glove Test – Water (NOTE: 1, 2). 128

Figure 14.1. Personal Protective Equipment (PPE) Checklist. 129

Chapter 15— GROUNDS, LAWN CARE AND MOWING SAFETY **132**

15.1. General Information. 132

Figure 15.1. Grounds, Lawn Care and Mowing Safety Checklist. 140

Chapter 16— VEHICLE MOUNTED ELEVATING AND ROTATING WORK PLATFORMS, MANUALLY PROPELLED AND SELF-PROPELLED MOBILE WORK PLATFORMS, AND ROLLING (MOBILE) SCAFFOLDS (TOWERS) 143

16.1. General Information. 143

16.2. Hazards and Human Factors. 143

16.3. General Requirements. 143

16.4. Vehicle-Mounted Elevating and Rotating Work Platforms: 143

16.5. Manually-Propelled and Self-Propelled Mobile Work Platform and Scaffolds (Towers): 148

Figure 16.1. Vehicle-Mounted Elevating and Rotating Work Platforms, Manually-Propelled and Self-Propelled Mobile Work Platforms, and Scaffolds (Towers) Checklist. 156

Chapter 17— SCAFFOLDING 160

17.1. General Information. 160

17.2. Hazards and Human Factors. 160

17.3. Requirements: 160

Table 17.1. Scaffold Grade Planking 173

Table 17.2. Tube and Coupler Scaffolds – Light Duty. 173

Table 17.3. Tube and Coupler Scaffold – Medium Duty 173

Table 17.4. Tube and Coupler Scaffold – Heavy Duty 174

Table 17.5. Outrigger Scaffolds 174

Table 17.6. Ladder-Type Platforms 175

Table 17.7. Bricklayers' Square Scaffolds. 176

Table 17.8. Horse Scaffolds. 176

Figure 17.1. Scaffolding Checklist. 177

Chapter 18— MACHINERY 179

18.1. General Information. 179

18.2. Hazards: 179

18.3. General Requirements: 179

18.4. Woodworking Machinery: 183

18.5. Metal Working Machinery: 193

18.6. Permanently Installed Grinding Machines: 204

Table 18.1. OSHA Standards. 212

Figure 18.1. Flange Installation. 213

Figure 18.2. Types 16, 17, 18, 18R, and 19 Cone and Plug Wheels. 214

Figure 18.3. Bench and Floor Stand Grinder Guard Exposure Angles. 214

Figure 18.4. Bench and Floor Stand Grinder Guard Exposure Angles When Contact Below the Horizontal Plane of the Spindle is Required. 215

Figure 18.5. Cylindrical Grinder Guard Exposure Angles. 215

Figure 18.6. Top Grinding Guard Exposure Angles. 216

Figure 18.7. Machinery Checklist. 217

Chapter 19— EMERGENCY SHOWER AND EYEWASH UNITS 251

19.1. General Information. 251

19.2. Effective Dates. 252

19.3. Responsibilities. 252

19.4. Equipment: 252

19.5. Acquisition. 253

19.6. Location. 253

19.7. Installation. 253

19.8. Control Valve and Actuating Mechanism: 254

19.9. Alarms and Lights. 254

19.10. Maintenance and Testing: 254

19.11. Training. 255

19.12. Water Supply. 255

19.13. Performance Specifications and Installation Requirements for Permanently-Installed Units: 255

Figure 19.1. Permanent Combination Emergency Shower and Face and Eyewash Unit. 258

Figure 19.2. Self-Contained Non-Pressurized Eye Wash Unit. 259

Figure 19.3. Eyewash Bottle. 260

Figure 19.4. Hand-Held Drench Hose (Permanent). 261

Figure 19.5. Activating Mechanisms. 262

Figure 19.6. Multiple-Spray Shower and Eyewash. 263

Figure 19.7. Wall-Mounted Permanent Eye and Face Wash. 264

Figure 19.8. Emergency Shower and Eyewash Units Checklist. 265

Chapter 20— SAFETY COLOR CODING, LABELING, AND MARKING FOR PIPING SYSTEMS 270

20.1. General Information. 270

20.2. Hazards and Human Factors: 270

20.3. General Requirements: 270

20.4. Employee Training. 274

20.5. Classification of Material in Piping Systems. 274

Table 20.1. Legend and Color Band Dimensions. 274

Figure 20.1. Exact Identification Always by Name of the Material Contained. 274

Table 20.2. Examples of Legend. 275

Table 20.3. Classification of Hazards of Materials and Designation of Colors[1]. Reference detailed descriptions in paragraph **20.3.6.** 275

Figure 20.2. Safety Color Coding, Labeling, and Marking For Piping Systems Checklist. 276

Chapter 21— Hazardous Energy Control (Lockout and Tagout) and Mishap Prevention Signs and Tags. 277

21.1. General Information. 277

21.2. Hazards. 277

21.3. General Requirements: 277

21.4. Specifications For and Usage of Signs: 278

21.5. Specifications For and Use of Tags: 282

21.6. Specifications for and Usage of Lockout and Tagout Devices: 286

21.7. Sample Lockout or Tagout Procedures (**Figure 21.1.**): 288

21.8. Examples of Color Applications. 290

21.9. Examples of Wording for Mishap Prevention Signs. 290

Figure 21.1. Danger Sign. 291

Figure 21.2. Caution Sign. 291

Figure 21.3. Directional Signs. 291

Figure 21.4. Instruction and Identification Signs. 292

Figure 21.5. Standard Biological Hazard Symbol. 293

Figure 21.6. AF Form 979, Danger Tag. 293

Figure 21.7. AF Form 980, Caution Tag. 294

Figure 21.8. AF Form 981, Out of Order Tag. 294

Figure 21.9. AF Form 982, Do Not Start Tag. 295

Figure 21.10. Reverse Side of AF Forms 979 and 982. 296

Figure 21.11. Reverse Side of AF Form 980. 296

Figure 21.12. Reverse Side of AF Form 981. 296

Table 21.1. Standard Criteria & Proportions For Locally Manufactured Signs (Letter Size Versus Legibility Distance). 297

Table 21.2. Standard Proportions for Danger Signs. 297

Table 21.3. Standard Proportions for Cautions Signs. 298

Table 21.4. Standard Proportions for Instruction and Identification Signs. 298

Table 21.5. Standard Proportions for Directional Signs. 299

Table 21.6. Examples of Color Applications. 299

Table 21.7. Examples of Wording For Mishap Prevention Signs. 300

Figure 21.13. **SAMPLE LOCKOUT OR TAGOUT PROCEDURES** 302

Figure 21.14. Hazardous Energy Control and Mishap Prevention Signs and Tags Checklist. 304

Chapter 22— FLAMMABLES AND COMBUSTIBLES **306**

22.1. General Information. 306

22.2. Human Factors. Human factors fall into two major categories: 307

22.3. Responsibilities: 307

22.4. General Requirements: 307

22.5. Specific Applications: 314

22.6. Military Exchanges, Commissaries, and Associate Retail Stores. 315

22.7. Small Gasoline Engine Powered Equipment. 316

Table 22.1. Maximum Allowable Size Containers and Portable Tanks. 318

Table 22.2. Storage in Inside Rooms. 319

Table 22.3. Indoor Container Storage. 320

Table 22.4. Indoor Portable Tank Storage 322

Table 22.5. Outdoor Container Storage 323

Table 22.6. Outdoor Portable Tank Storage 324

Table 22.7. Maximum Allowable Size of Containers — General Laboratories 325

Table 22.8. Maximum Allowable Size of Containers — Health-Related Laboratories 326

Figure 22.1. CHECKLIST FLAMMABLE AND COMBUSTIBLE LIQUIDS 327

Attachment 1— GLOSSARY OF references and supporting information 337

Chapter 1

INTRODUCTION

1.1. Purpose:

1.1.1. The policy and guidance published by the Department of Labor in the 29 series of the Code of Federal Regulations (CFR) refers to requirements the employer must comply with in order to provide workers a safe and healthy workplace. The Occupational Safety and Health Administration (OSHA) dictates what must be accomplished in the workplace, but not necessarily how it will be accomplished, or by whom.

1.1.2. Basically, this standard assigns responsibilities to individuals or functions, which helps commanders manage their safety and health programs, ensuring they are in compliance with OSHA. The Air Force Occupational Safety and Health (AFOSH) program provides a uniform program, which Commanders may supplement, when necessary, to ensure a safe and healthful environment is provided in the work place.

1.1.2.1. In addition, AFOSH standards are used to publish requirements necessary to prevent the loss of life or property based on trends or past history. OSHA is concerned only with the safety and health of the worker. In contrast, Air Force Commanders must also be concerned with facility safety and loss reduction, since there is no insurance to replace facilities. AFOSH standards are not only implemented by commanders--functional managers, supervisors, and workers are also involved in this process.

1.1.2.2. A secondary reason for AFOSH standards is that they provide a way to deal with funding and manpower, which are functionally-related and critical to the efficient implementation of each OSHA standard requirement. This is accomplished by proper documentation and justification of requirements for funding and manning programs directed by OSHA.

1.2. How to Use This Document

1.2.1. This document is a consolidation of all material in the 91-series AFOSH standards relating to general operations within the Air Force. References to other AFOSH standards and related Air Force publications, OSHA standards, and national safety consensus standards are provided as appropriate. It is recommended that users search for required information and print in hard copy only the material needed to complete the job at hand. To facilitate electronic work searches, every effort was made to use standard terminology throughout the document. For example, to determine what personal protective equipment is required for a specific job, search for PPE. **NOTE:** A Glossary of References and Supporting Information (including an explanation abbreviations, acronyms, and terms used) is at **Attachment 1.**

1.2.2. AFOSH standards are intended for use, not only by installation ground safety officials and commanders, but by functional managers, supervisors, and workers, at all levels. Therefore, the information in this standard is derived from many sources and includes non-Air Force and Air Force directives. This information is included in order to provide policy, guidance, and implementation in a single, simple to use and understood document for the protection of worker health and compliance with Federal Law. This consolidated standard applies to all US Air Force organizations, including all

US Air Force Reserve and Air National Guard personnel. In addition, as it refers to ANG Air Technician during their daily operations as well as when deployed as a federal military force.

1.3. Responsibilities: Also see specific responsibilities listed in all chapters and those listed in AFI 91-301, *Air Force Occupational and Environmental Safety, Fire Protection, and Health (AFOSH) Program*.

1.3.1. Air Staff. All Air Staff elements will ensure policies and procedures are consistent with the spirit and intent of this standard.

1.3.2. Air Force Safety Center (HQ AFSC). Will:

1.3.2.1. Provide professional advice and guidance applicable to all areas in the realm of safety.

1.3.2.2. Act as approval authority for safety variances. **NOTE:** Requests for variances shall be processed through MAJCOM, Direct Reporting Units (DRU), or Field Operating Agencies (FOA) ground safety offices.

1.3.3. Major Commands (MAJCOM), (DRU), and (FOA). will provide program oversight and supplements, as necessary.

1.3.4. Commanders or Functional Managers and Supervisors:

1.3.4.1. Ensure that applicable Occupational Safety and Health (OSH) guidance for workplace and operations are available to all personnel.

1.3.4.2. Ensure compliance with occupational safety, fire prevention, and health program requirements in their areas of responsibility

1.3.4.3. Ensure AFOSH program requirements are part of the measurement of subordinate employees' performance in all activities.

1.3.4.4. Ensure OSHA documents and AFOSH standards are available at installation ground safety offices.

1.3.4.5. Provide a safe and healthful workplace and conduct self-inspections for hazards or deficiencies.

1.3.4.6. Provide training for employees in job safety, fire prevention, and health as required by OSHA and AFOSH directives, Air Force Policy Directives (AFPD), Air Force Instructions (AFI), Air Force Manuals (AFMAN), and any other associated directives.

1.3.4.7. Provide PPE and ensure compliance with program requirements (refer to **Chapter 14**).

1.3.5. Supervisors. Supervisors must recognize potential mishap factors in the workplace. Supervisors shall not require personnel to work in environments and conditions that are hazardous to their safety or health without first providing adequate engineering and administrative controls or personal protective equipment (PPE). Supervisors will:

1.3.5.1. Ensure safe working conditions.

1.3.5.2. Provide necessary protective equipment.

1.3.5.3. Ensure required guards and protective equipment are provided, used, and properly maintained.

1.3.5.4. Ensure tools and equipment are properly maintained and used.

1.3.5.5. Plan the workload and assign employees only to jobs they are qualified to perform.

1.3.5.6. Ensure the employees understand the work to be done, the hazards that may be encountered, and the proper procedure for doing the work safely.

1.3.5.7. Take immediate action to correct any violation of safety rules observed or reported to them.

1.3.5.8. Ensure workers exposed or potentially exposed to hazardous chemicals or materials are trained on the hazards of those chemicals and materials per AFOSH Standard 161-21, *Hazard Communication*. Information should be retrieved from the Material Safety Data Sheet (MSDS) for each chemical or material used, however for selection of PPE the installation BEE will be consulted.

1.3.5.9. Conduct Job Safety Analysis (JSA) of job tasks whenever required to ensure a safe work environment. **NOTE:** A JSA shall be accomplished when new equipment is installed, equipment is relocated, or new procedures are implemented in critical or hazardous operations. Refer to paragraph **1.4.** of this standard and AFI 91-202, *The US Air Force Mishap Prevention Program* and AFI 91-301, *Air Force Occupational and Environmental Safety, Fire Protection, and Health (AFOSH) Program*.

1.3.6. Air Force Personnel (military and civilian). Will:

1.3.6.1. Comply with OSH guidance.

1.3.6.2. Promptly report safety, fire, and health hazards and deficiencies.

1.3.6.3. Promptly report injuries and illnesses to the supervisor.

1.3.6.4. Comply with PPE requirements, including its use, inspection, and care.

1.3.6.5. Give due consideration to personal safety and the safety of fellow workers while performing assigned tasks.

1.4. Job Safety Analysis (JSA). Supervisor's outlines (lesson plans) may be modified to include this requirement. The prescribing directives for conducting JSAs are AFIs 91-202 and 91-301. General requirements for PPE is also located in OSHA 29 CFR 1910.132, *Personal Protective Equipment-General Requirements*. See **Figure 1.1.** for a sample JSA.

1.4.1. Documentation. Each workcenter must conduct and document JSAs where appropriate. JSAs will include the following data:

1.4.1.1. Work procedure evaluated.

1.4.1.2. Name and signature of person certifying the JSA has been performed.

1.4.2. Training. Training must include:

1.4.2.1. When PPE is necessary;

1.4.2.2. How to don, take off, adjust, and wear PPE;

1.4.2.3. Limitations of PPE;

1.4.2.4. Care, maintenance, useful life, and disposal of PPE; and

1.4.2.5. An opportunity for each employee to demonstrate understanding of training and ability to use PPE properly (hands-on training prior to work).

1.4.2.6. Retraining is required when:

1.4.2.6.1. Employee exhibits a lack of understanding or skill with the required PPE;

1.4.2.6.2. Changes in the workplace render previous training obsolete; or

1.4.2.6.3. Changes in the types of PPE used render previous training obsolete.

1.4.2.7. Supervisor must verify affected employees have received and understand required training through written certification that contains:

1.4.2.7.1. Name of each employee trained;

1.4.2.7.2. Dates of training; and

1.4.2.7.3. Subject of certification.

NOTE: This should be documented IAW AFI 91-301 (i.e.: respirator, fire extinguisher, personal protective eye equipment).

1.5. Occupational Safety and Health Administration (OSHA) Requirements

1.5.1. Air Force safety officials at all levels are prohibited from providing waivers for material in this standard derived from OSHA rules (refer to AFI 91-301, paragraph 6.2.). Air Force Safety Center or higher-headquarters officials may establish more stringent requirements than those established by OSHA, when supported by AF mishap analysis, inspection reports, etc. When appropriate, OSHA references are provided.

1.5.2. Some non-OSHA requirements cannot be waived without the specific permission of HQ AFSC/SEG, HQ AFMOA/SG, or HQ AFCESA/CES/CEX, whichever is appropriate. In those instances, a statement indicating who to contact is included.

1.6. National Consensus Standards . Select committees of federal, industrial, and private sector personnel develop these standards under the sponsorship of one of the national standards-setting organizations. Examples are: American National Standards Institute (ANSI), National Fire Protection Association (NFPA), and the American Society of Mechanical Engineers (ASME). National consensus standards are not directive, unless adopted by a regulatory federal agency or the Air Force. **NOTE:** National consensus standards referenced in this document, have been adopted for Air Force use.

Figure 1.1. Job Safety Analysis Guide.

JOB: **DATE:**
WORKCENTER: **SUPERVISOR:**
TITLE OF WORKER WHO PERFORMS TASK:
REQUIRED PERSONAL PROTECTIVE EQUIPMENT (PPE):

ANALYSIS BY: ***REVIEWED BY:***

F1.1. Sequence of Basic Steps. Break the task down into its basic steps. For example, what is done first, what is done next, and so on. You can do this by: (1) observing the task, (2) discussing it with workers, (3) using your experience and knowledge of the task, or (4) a combination of all three. Record the steps in the task in their normal order of occurrence. Describe what is done; not the details or how it is done. Three or four words are normally enough to describe each step in the task.

F1.2. Potential Mishap Causes or Hazards. For each task step, ask yourself what mishap could happen to workers performing the task and what the probability would be of the mishap occurring. Get the answers by: (1) observing the task, (2) discussing the task with workers, and (or) (3) using "lessons learned" from other mishaps. Ask the questions:

F1.2.1. Can workers be struck by or contacted by anything?

F1.2.2. Can they strike against or come in contact with any item which can cause injury?

F1.2.3. Can they be caught in or between anything?

F1.2.4. Can they fall?

F1.2.5. Can they overexert?

F1.2.6. Are they required to do repetitive lifting or heavy lifting?

F1.2.7. Are they exposed to potential hazards such as toxic gases, chemicals, radiation, or noise?

F1.3. Recommended Safe Task Procedure. For each identified potential mishap cause or hazard, consider the following questions:

F1.3.1. How should the workers perform the task step to avoid the mishap or eliminate the potential hazard?

F1.3.2. What can be done to eliminate or mitigate the hazard by redesigning the work area or equipment?

F1.3.3. How can the procedure be modified to eliminate the hazard? **NOTE:** Be sure to describe in detail the precautions workers must take and ensure that these steps are placed in the task procedure or checklist. Take special care that important steps or details are not inadvertently omitted from the task. Ensure that the guidance is clear and specific and easily understood by workers. Also, include the requirements in paragraph **1.3.5.9.** in the JSA.

Chapter 2

HUMAN FACTORS

2.1. Human Factors. Human factors encompass two major categories. These are attitudinal and physical factors that may affect worker performance:

2.1.1. Unhealthy emotions, job or domestic pressures, distractions, job knowledge, hurrying or feeling rushed can contribute to an unsafe attitude and negatively impact worker performance.

2.1.2. Physical factors such as fatigue, physical strength, reactions to over-the-counter and prescriptions medications, and the influence of alcohol and illegal drugs may contribute to behavior that leads to a mishap. Examples include workers:

2.1.2.1. Ignoring directions from supervisors and workleaders.

2.1.2.2. Failing to use personal protective equipment (PPE) or proper tools.

2.1.2.3. Performing a task while distracted by personal problems or interpersonal situations.

2.1.2.4. Not following established procedures or taking unauthorized shortcuts to save time.

2.1.2.5. Performing job tasks while taking prescribed medications that may cause drowsiness.

2.1.2.6. Performing job tasks while under the influence of alcohol or illegal drugs.

2.1.2.7. Using equipment when not properly trained or qualified.

2.1.2.8. Being unaware of the hazardous properties of flammable and combustible liquids or materials and there proper control. (OSHA 29 CFR 1910.1200, *Hazard Communication*).

2.2. Responsibilities. Managers, supervisors, and workers must be aware of human factors such as fatigue, worry, anger, inattention, illness, or improper attitudes than can lead to worker error and may result in injury. Engineers, functional managers, and supervisors can in some cases mitigate the effects of human factors in the work place by considering personnel exposure and work processes when placing machinery and equipment in the workplace.

Chapter 3

PHYSICAL HAZARDS

3.1. Hazards.

3.1.1. Hazards should be engineered out, substitute a less hazardous material or less hazardous process, isolated operations, provide work-around procedures, provide administrative controls, whenever possible before considering the use of PPE. Protective equipment will be considered as the last result and should not be relied on alone to provide protection against hazards, but should be used in conjunction with guards, engineering controls, and sound manufacturing practices. When PPE will be used to protect workers from physical hazards consider that eye, face, and body injuries may be caused by exposure to chemicals, by materials being thrown from a machine, and when air pressure or similar energy source propels substances at sufficient velocity to be injurious. Other eye and face injuries may occur when harmful liquids are sprayed, squirted, splattered, dropped, or applied. When PPE is required, the proper protective devices must be matched to the hazards identified. This is accomplished by reviewing the JSA and material safety data sheets (MSDS) for the task being accomplished, (refer to **Chapter 14**), or contact the installation ground safety or bioenvironmental engineering staffs for assistance. Eyewash units, eye/face units, deluge showers, and other similar devices are emergency equipment and are not substitutes for protection devices (refer to **Chapter 19**).

3.1.2. Examples of physical hazards follow:

3.1.2.1. Use of soaps and solvents can cause surfaces to become slippery and create the potential for slips and falls. Soaps and solvents can also cause health problems such as dermatitis, eye irritation, and other medical problems if the solvents become inhaled.

3.1.2.2. Certain cleaning solvents may ignite if applied to hot surfaces or when heated, causing fires and (or) injuries to workers.

3.1.2.3. Pressure cleaners and steam cleaners operate at pressures in excess of 100 pounds per square inch (psi) and temperatures near 200 degrees Fahrenheit (F). Improper use can result in severe personal injury.

3.1.2.4. Hazards are present when working in areas where flying or falling objects may be present.

3.2. Responsibilities:

3.2.1. The supervisor shall assess the workplace to determine if hazards are present, or are likely to be present, that could necessitate the use of PPE. If such conditions exist the supervisor shall conduct a JSA to determine the best method of controlling the risk and, if necessary, the appropriate PPE required for a particular task. (Refer to OSHA 29 CFR 1910.132.)

3.2.2. The supervisor shall develop a Job Safety Outline (lesson plan) which contains all the job safety training the workers will require (JSAs may be incorporated into the Job Safety Outline).

3.2.3. When the worker receives job safety training, the supervisor will document the training IAW AFI 91-301. The supervisor may maintain these three documents together or as separate documents. See AFI 91-202, *The US Air Force Mishap Prevention Program* and AFI 91-301, *AF Occupational & Environment Safety, Fire Protection and Health (AFOSH) Program* for information on the JSA, and

Job Safety Outline. **NOTE:** A JSA is not required whenever existing guidance covers all safety requirements of an operation or process. Examples are: TO 00-25-172, *Ground Servicing of Aircraft and Static Grounding/Bonding*, and TO 1-1-3, *Inspection and Repair of Aircraft Integral Tanks and Fuel Cells*.

Chapter 4

MANUAL MATERIAL HANDLING AND LIFTING TECHNIQUES

4.1. Hazards and Human Factors:

4.1.1. Strains, sprains, hernias, fractures, bruises, and lacerations may result from poor manual material handling and lifting practices. The greater sizes and quantities of equipment and materials being used throughout the Air Force in recent years has contributed to an increase in injuries associated with manual material handling and lifting operations. Lifting, carrying, dropping, and lowering are the common physical acts responsible for these injuries. Sprains account for approximately 30 percent of the lost time injuries in the Air Force. Many strains are the direct result of improper lifting techniques, lifting with no assistance, or failure to use required and available manual material handling equipment.

4.2. Manual Handling. Influencing factors when manually lifting materials include the size, shape, and weight of the object to be lifted (and distance to be moved.) Consider team lifting when items are known to weigh more than 25 pounds. (Refer to paragraph **4.6.3.**) For weights greater than this, additional help will be sought or mechanical assists used. Proper lifting techniques are as important as the weight of the object to be lifted.

4.3. Lifting and Carrying. There are several variables, which influence the ability of people to manually handle and lift materials. Physical capabilities of individuals and variables in the work environment need consideration. Proper consideration and knowledge of limitations and the use of correct lifting and carrying techniques will reduce the possibility of injury.

4.3.1. Physical characteristics include factors such as strength, mobility, fatigue, and motor functions of the individual.

4.3.2. Psychological considerations might be the motivation, emotional state, job satisfaction, and attitude of the individual toward work.

4.3.3. Pre-existing worker injuries may also bear consideration.

4.3.4. Task variables might include the weight, size, shape, distribution, degree of shift (of the load in the container), and the location of the center of gravity (CG) of the load to be handled.

4.3.5. Workplace layout and the degree of movement required, obstacles, distances moved, and direction of movement must be factored.

4.3.6. Level of demand to include frequency of lift, duration of lifting task, accelerations and velocities of lift, shift duration, degree of precision, and relative proportion of muscles involved in the lift shall be considered.

4.3.7. Environmental variables can have an impact, consider heat and cold stress, noise and vibration, lighting, toxic agents, traction, stability of the work platform, and atmospheric contaminants that could affect the task.

4.4. Training. Supervisors must train personnel who regularly perform manual lifting duties. Supervisors will ensure their personnel receive thorough instructions on the proper techniques to use and what PPE is required. In addition, personnel will be instructed in the use of available manual lifting devices and the

procedures for performing routine or high risk manual handling activities. To the new worker, hand trucks and wheelbarrows look deceptively easy to use. Supervisors will instruct workers on their use. Seeking improvements in the methods used for accomplishing the work and eliminating manual material handling hazards; and an understanding of the stresses involved during manual handling which cause injuries are important and should also be addressed during training. This training should include both verbal and written materials that explain how to do the task correctly with practice and proper motions. Training will be documented on the IAW AFI 91-301, or other authorized methods (refer to AFI 91-301). Information to assist the supervisor in establishing a program may be found in this chapter and in the National Safety Council (NSC) *Accident Prevention Manual for Industrial Operations, Engineering, and Technology.* When necessary, the supervisor should contact the installation ground safety staff for assistance in developing the program and to review the NSC publication. The supervisor shall consider having personnel evaluated for physical fitness for duty when job tasks require continuous manual lifting. When required, physical profile changes will be evaluated for possible reassignment actions to prevent recurring injuries to personnel.

4.5. Minimizing Manual Material Handling Hazards:

4.5.1. Engineering Controls. A preferred method of minimizing the risk of manual lifting is the use of engineering controls such as employing mechanical assists to decrease the force, the repetition, distance of travel, and frequency of the manual handling activities. Some examples might include employing scissor tables, elevators, conveyors, and gravity chutes.

4.5.2. Administrative Controls. Job rotation schedules and mandatory work-rest cycles can be useful to reduce mishap potential, but do not eliminate the hazard and are not as reliable as engineering controls.

4.5.3. Work Design Principles. Conduct a job safety analysis (refer **Figure 1.1.**) to identify potential hazards, and when practical, arrange tasks and select workstations using the following principles:

4.5.3.1. Place objects to be lifted at the approximate height of the knuckles when the arms dangle at side of the body.

4.5.3.2. Limit stack height to shoulder level. If items must be stacked higher, provide step-up access to eliminate lifting above shoulder level.

4.5.3.3. Use grips, handles, and other devices to provide better control of items.

4.5.3.4. Slide materials instead of lifting, whenever possible.

4.5.3.5. Use gravity assist in moving materials.

4.5.3.6. Ensure adequate maneuvering space to eliminate the need to twist the body.

4.5.3.7. Consider team lifting when items are known to weigh more than 25 pounds. (Refer to paragraph **4.6.3.**)

4.6. Proper Lifting Methods. No single technique for preventing injury during lifting and material handling has been discovered despite numerous research efforts. The best prevention strategy is to ensure workstations are properly designed, loads are manageable in both size and weight distribution, the frequency and duration of lifting are not excessively stressful, and workers can demonstrate a knowledge of proper techniques for material handling. There are three basic methods of lifting, that is, straight back-bent knees, free style, and kinetic. Each has advantages and limitations (refer to **Figure 4.1.**).

4.6.1. The kinetic method is the most widely accepted and taught because it provides more stability for the worker while reducing load on the back muscles and intervertebral disks. Instructions how to lift properly follow:

4.6.1.1. Before an object is lifted, it should be inspected to make certain no grease or slippery substance will cause the object to slip. Also inspect the objects for slivers, sharp edges, and rough or slippery surfaces before attempting to lift.

4.6.1.2. Position feet correctly. Place far enough apart for balance with one foot to the rear of the object and the other foot slightly ahead of the other and to the side of the object.

4.6.1.3. Crouch close to the load. Crouching is preferred to squatting. Stay close to the load to minimize strain on the back muscles.

4.6.1.4. Always keep the back as straight as possible. It may not be possible to keep the back in the vertical plane but avoid arching the back. Bend from the hips and not from the middle of the back.

Figure 4.1. How to Lift Properly.

4.6.1.5. Pick up materials with a full palm grip. Do not attempt to pick up items using a fingertip grip. Gloves (Leather or Leather-palmed) shall be worn when lifting objects which have sharp or burred edges or splintered surfaces.

4.6.1.6. With the arms, slide the object towards the body putting it in motion (kinetic energy). At the same time, lift the object with the legs and bring the back to a vertical position. Keep the object close to the body; avoid twisting while lifting.

4.6.2. Setting the Object Down. Use the same motion as when lifting, but reverse it to set an object down. Lower the load by bending the legs and squatting with the back straight. Take care when releasing the load to prevent injury to fingers, hands, or feet.

4.6.3. Team Lifting. When its required to move heavy or unusual shaped items manually, always seek and obtain assistance When it is not practical to use mechanical equipment assign additional workers to the task. When two or more people are required to move or carry an object, adjust the load so each person carries an equal part. If possible use workers similar in size and train them in team-lifting. Workers need to understand that if one worker lifts too soon, shifts the load, or lowers improperly, that person or their partner(s) may be overloaded and strained. Test lifts should be made before proceeding. The key to lifts using two or more personnel is to make every move in unison. Assign one person to give orders to ensure the necessary coordination for movement. The supervisor and workers are responsible for assessing all available methods to safely handle materials described above and using mechanical assistance whenever possible.

4.7. Carrying Methods. Acceptable carrying methods differ, based upon the type of material, distance, and number of workers. Workers should be instructed during initial training in each procedure--for example, neck, shoulder, side, tray, two-person, and under-arm carry methods, etc. (see definition for "carrying methods" in **Attachment 1**). Points to remember:

4.7.1. Use appropriate PPE as determined for each task such as gloves to protect the hands and steel-toed safety shoes to protect the feet.

4.7.2. Keep fingers away from pinch and shear points.

4.7.3. Do not carry a load that obstructs the view of the direction of travel. Make sure that the path of travel is clear.

4.7.4. Do not turn at the waist to change direction or to put an object down. Turn the whole body and crouch down to lower the object.

4.8. Carrying Items Up or Down Stairways:

4.8.1. Adhere to the guidance provided by the supervisor.

4.8.2. Try to reduce the bulk or size of the object carried to allow for maximum visibility.

4.8.3. Use assistance when required and available.

4.8.4. Use mechanical material handling equipment whenever loads are too heavy or bulky to be lifted or carried efficiently or safely by hand. Forklifts, hand trucks, rollers, conveyors, or cranes (when properly used) simplify materials handling and greatly reduce the hazards of handling supplies and equipment.

4.9. Manual Material Handling Equipment. This equipment will be used whenever loads are too heavy or bulky to be lifted or carried efficiently or safely by hand. Hand trucks, dollies , two-wheeled hand trucks and wheelbarrows (when properly used) simplify materials handling and greatly reduce the hazards of handling supplies and equipment.

4.9.1. Hand Trucks, Dollies and Wheelbarrows. Hand trucks, dollies, wheel barrows or other manual devices shall be used to lift and (or) carry bulky or heavy items whenever possible.

4.9.1.1. Hand trucks. Tip the load to be lifted forward slightly so the tongue of the truck goes under the load.

4.9.1.1.1. Make sure the tongue of the truck is all the way under the load prior to movement.

4.9.1.1.2. Keep the center of gravity of the load as low as possible. Place heavy objects on the bottom of the load. Keep feet clear of the wheels.

4.9.1.1.3. The center of gravity of the load on both the hand truck and wheelbarrow will be kept as low as possible. The weight should be forward so it will be carried by the axle, not the handles. If loaded correctly, the hand truck should carry the load—the operator need only balance and push.

4.9.1.1.4. Place the load so it will not slip, shift, or fall. Load only to a height that will allow a clear view ahead. For added safety, strap or chain bulky or dangerous cargo (such as cylinders or drums) to the hand truck's frame.

4.9.1.1.5. Avoid walking backward with a hand truck if possible. This eliminates the need for a worker to look over their shoulder to see clearly.

4.9.1.1.6. Never brake a hand truck by putting your foot on its wheel; keep your feet clear of the wheels at all times.

4.9.1.1.7. When going down an incline, keep the hand truck ahead of you. When going up, pull the hand truck behind you.

4.9.1.1.8. Move the truck at a safe speed. Do not run. Keep the truck constantly under control.

4.9.1.1.9. Secure and store unused trucks in a designated area where they don't create a hazard or traffic obstruction.

4.9.1.1.10. When a hand truck is loaded in a horizontal position, proper lifting procedures discussed in (paragraph **4.6.**) will be used to prevent operator injury.

4.9.1.2. The same basic principles listed in paragraphs **4.9.1.1.1.** through **4.9.1.1.10.** shall apply to dollies and wheelbarrows.

4.9.1.3. Two-wheeled hand trucks and wheelbarrows are designed in a variety of shapes and sizes for both general and special purposes. Preference will be given to procuring hand trucks and wheelbarrows equipped with knuckle guards.

4.9.2. Multi-Wheel Trucks. As with two-wheeled equipment, multi-wheeled trucks and dollies vary greatly in design and use. Most mishaps occur due to improper parking causing the worker to fall over the equipment or improper loading of material which causes the cart to tip. Extra emphasis will be placed on worker training in these two areas, along with frequent observation of work practices to immediately correct unsafe acts. In addition:

4.9.2.1. When loading, arrange the cargo so items won't fall.

4.9.2.2. If the truck has no drawbar, push it. Keep your hands behind the cart.

4.9.2.3. If the truck has a drawbar, pull it, so you'll be able to see better. Stand to one side, to keep the truck from running onto your ankles.

4.9.2.4. If there are floor markings, stay within their boundaries.

4.9.2.5. When storing the truck, lock or block its wheels.

4.9.2.6. Don't misuse the truck.

4.9.2.7. Don't ride on a truck designed for a walking operator.

4.9.2.8. Don't carry other people.

4.9.2.9. Don't carry more than the truck's maximum load capacity.

4.9.2.10. Ensure the weight of the truck, plus its load, is less than maximum posted floor loads.

4.9.2.11. Make sure you have enough clearance in aisles and other tight areas.

4.9.2.12. Remember that the inertia, or momentum, of a truck can make it hard to change its speed or direction.

4.9.2.13. Watch out for pedestrians--always give them the right-of-way.

4.9.2.14. Don't block aisles, doorways, or material another worker may need.

4.9.3. Lever-Operated Hoists:

4.9.3.1. Acquisition. Lever-operated hoists shall meet the requirements and specifications of recognized industry standards.

4.9.3.1.1. Capacity of all lever-operated devices shall be permanently and conspicuously marked in an easily visible place on the hoist.

4.9.3.1.2. Only ratchet and pawl and load brake hoists, which include a means to prevent a suspended load from self-lowering, will be procured. Lowering under load shall be by operation of the hoist lever.

4.9.3.2. Inspections. Daily or prior to each use, lever-operated hoists shall be inspected for:

4.9.3.2.1. Loose or worn parts, nuts, bolts, etc.;

4.9.3.2.2. Cracked or broken welds or parts;

4.9.3.2.3. Deformed or damaged hooks

4.9.3.2.4. Bent or deformed pawls.

4.9.3.3. Annual inspection shall include:

4.9.3.3.1. Complete inspection of all wire rope, chain, and fittings or attachments.

4.9.3.3.2. Inspection of brakes, pawls, or other holding features.

4.9.3.3.3. Inspection of the chain length. Chains that have elongated more than one fourth of an inch in 12 inches shall be removed from service.

4.9.3.4. Identification Tags. Identification tags shall be attached to all hoists and shall include the following information: date of inspection; date of proof test; capacity of hoist; and identification number of hoist.

4.9.3.5. Maintenance and Testing:

4.9.3.5.1. All new hoists will have the manufacturer's certification indicating that all proof-testing has been accomplished. All hoists which have had load-suspension parts altered, replaced, or repaired will be proof-tested before use. These tests will be performed at no less than 100 percent or more than 125 percent of the rated capacity. Underhung hoists that are not an integral part of a supporting structure for lateral movement, such as an overhead crane, must have manufacturer's certification indicating the proof test was accomplished with a test

load of at least 125% of rated capacity) Reference ANSI/ASME B30.16). A record of all tests will be maintained by the user.

4.9.3.5.2. Maintenance and lubrication will be performed according to the manufacturer's instruction or applicable TO.

4.9.3.6. Safe Operations:

4.9.3.6.1. Lever-operated hoists shall only be used in a direct pull. Where indirect pulls are permitted by design of the hoist, a sheave or pulley of adequate size shall be used.

4.9.3.6.2. Hoist cable, rope, and chain shall not be wrapped around the load. Use only slings or other approved lifting devices. For example, cargo straps will not be used for lifting, unless stated in approved Air Force technical data or TOs.

4.9.3.6.3. Positive action safety latches shall be installed on all hooks.

4.9.3.6.4. Hooks shall not be point loaded unless designed for this purpose. All loads shall be seated in the saddle of the hook.

4.9.3.6.5. Extensions to levers (cheater bars or pipes) shall not be used to increase leverage. Extendible levers designed and permanently installed by the manufacturer are authorized.

4.9.3.6.6. Manually operated lever hoists shall only be operated by personnel familiar with the use of the equipment. Operator qualifications will be as determined by the facility and (or) shop supervisor or designated representative.

4.9.3.6.7. The rated load shall not be exceeded except for authorized proof tests.

4.9.3.6.8. Hoists shall be attached to well defined dead-end points capable of withstanding the intended load. **NOTE:** Lifeline attach points shall not be used for hoists.

4.10. Inspection of Materials. Prior to movement, material will be examined for sharp edges, protruding points, and weak places. When defects cannot be corrected, additional steps will be taken to protect the worker. This should be accomplished by isolating the unsafe condition, for example, using an enclosed cart when moving sheetmetal scraps.

4.11. Personal Protective Equipment (PPE). Supervisors will conduct a JSA to evaluate each manual material handling task and identify the need for PPE such as safety-toed shoes, gloves, and eye protection (refer to **Figure 1.1.**). The installation ground safety and bioenvironmental engineering (BEE) staffs are available to assist in this evaluation process. **Chapter 14** of this standard, Department of Defense (DoD) 4145.19-R-1, Storage and Materials Handling, and Air Force Joint Manual (AFJMAN) 23-210, *Joint Service Manual (JSM) for Storage and Materials Handling*, should be consulted when selecting PPE. **NOTE:** The BEE will certify the applicability of chemical protective equipment, respirators, or other health-related PPE.

4.11.1. All personnel directly involved in the handling of supplies or material will wear approved steel-toed safety shoes.

4.11.2. Personnel will wear leather or leather-palmed gloves when manually handling objects that have sharp or burred edges or splintered surfaces.

4.11.3. Personnel will wear appropriate ear protection when working in or visiting hazardous noise areas.

4.11.4. Personnel will carry tools that have sharp edges in protective holders.

4.11.5. Personnel will wear appropriate protective clothing when transporting, delivering, or working with hazardous materials.

4.11.6. Material handlers will not wear finger rings, jewelry (which may include watches), or loose clothing and will keep long hair completely covered when around moving conveyor belts, open rotating shafts, or other moving parts of machinery. (Refer to **Chapter 9**.)

4.11.7. Personnel will wear goggles and (or) safety glasses with side shields and gloves when cutting strapping. Personnel will stand clear so cut strapping does not contact them. A board or other hold-down device may be used to prevent the strapping from flying out from the material when cut.

4.12. Inspection and Maintenance of Manual Handling Equipment (MHE):

4.12.1. Manual MHE, such as hand trucks, wheelbarrows, dollies, pallet jacks and similar unpowered equipment, will be checked visually before use to assure equipment is in operable condition. This equipment will also be maintained and inspected in accordance with the manufacturer's instructions. Any repairs required will be accomplished prior to use of the equipment.

4.13. Other Safety Requirements:

4.13.1. Stack all materials neatly, arrange them in an orderly manner. Limit the stack height to minimize the possibility for the materials to fall or collapse.

4.13.2. Remove, repair, or replace defective or broken strapping on material.

4.13.3. Except when using approved chutes, do not throw materials from elevated places. Carry or lower them.

4.13.4. If materials handling equipment (MHE) is not available and drums must be manually moved; roll drums by pushing with the hands, not the feet. Ensure a minimum of two workers set the drum upright.

4.13.5. Place broken glass in a sturdy container or enclose the broken glass in cardboard or protective shield if disposal includes placing glass in a plastic bag. This should eliminate broken glass protruding from bags and prevent injury to personnel who handle the bags.

4.13.6. Do not run when carrying materials.

4.13.7. Practice good housekeeping when unpacking materials. Discard banding, packing materials, and empty cartons properly and do not allow these materials to accumulate in work areas.

Figure 4.2. Manual Material Handling and Lifting Techniques Checklist.

F4.1. This is not an all inclusive checklist. It, like all the checklists in this standard, simply highlights some critical items in the corresponding chapters. Other requirements exist that are not included in the checklist. Where appropriate, MAJCOMs, FOAs DRUs, local safety staffs, and supervisors will add to this checklist to include command or individual location or shop-unique requirements or situations.

F4.2. Are personnel who regularly perform manual lifting duties properly trained? (Reference **4.4.**)

F4.3. Does training instruction include information such as what PPE is required, what manual lifting devices are available and their proper use? (Reference **4.4.** & **4.9.**)

F4.4. Is training documented IAW AFI 91-301, or other authorized format? (Reference **4.4.**)

F4.5. Are materials handling activities kept to a minimum through the application and use of engineering controls when possible? (Reference **4.5.1.**)

F4.6. Are loads to be lifted manageable in both size and weight distribution? (Reference **4.6.** & **4.8.4.**)

F4.7. Are objects to be lifted inspected for grease or other slippery substances that might cause a worker to mishandle the object or get injured during a movement? (Reference **4.6.1.1.**)

F4.8. Do individuals seek assistance when is necessary to move heavy or odd shaped items? (Reference **4.6.3.**)

F4.9. Are workers properly trained in team lifting techniques when they will be lifting heavy or odd shaped items? (Reference **4.6.3.**)

F4.10. Are protective gloves and protective footwear provided and used when needed to protect the hands and feet of workers involved in manual materials handling activities? (Reference **4.7.1.**)

F4.11. Are wheeled hand trucks and dollies loaded so that the cargo is stable and the loads won't fall? (Reference **4.9.1.1.4.**)

F4.12. Is the rated capacity on all lever operated hoists permanently and conspicuously marked and easily visible? (Reference **4.9.3.1.1.**)

F4.13. Are hoists equipped with a device (ratchet and pawl or load brake) that prevents a suspended load from self-lowering and ensures loads are only lowered by operation of the hoist lever? (Reference **4.9.3.1.2.**)

F4.14. Are hoists inspected daily or prior to each use for items such as loose or worn parts, cracked or broken welds, deformed hooks or chain, and bent or deformed pawls? (Reference **4.9.3.2.**)

F4.15. Are annual inspections conducted and identification tags attached to hoists indicating date of inspection, date of proof test, capacity of hoist, and identification number of hoist? (Reference **4.9.3.3.** & **4.9.3.4.**)

F4.16. Do hoist users maintain records of all tests? (Reference **4.9.3.5.1.**)

F4.17. Are only approved lifting devices like slings used to lift loads and not hoist cable, rope, or chain wrapped around the load? (Reference **4.9.3.6.2.**)

F4.18. Do material handlers remove finger rings, and jewelry prior to working with materials or handling equipment that could prove hazardous? (Reference **4.11.6.**)

F4.19. Are materials neatly stacked and the height limited to minimize the possibility for the materials to fall or collapse? (Reference **4.13.1.**)

Chapter 5

HOUSEKEEPING

5.1. Floors and Walking Surfaces. Keep areas, where personnel walk and work, free of potential tripping hazards such as tools, electrical cords, air lines, and packaging materials. Clean up spills as soon as possible and post warnings until cleanup is complete. (Refer to **Chapter 7** for additional information.)

5.2. Scraps and Combustible Waste. Provide sufficient metal or noncombustible containers with self-closing lids for the disposal of combustible wastes, soiled rags, and other flammable materials. These containers must be marked according to the requirements in AFI 32-7042, *Solid and Hazardous Waste Compliance*, and AFOSH Standard 161-21, *Hazardous Communications Program*. Dispose of contents according to approved hazardous waste disposal procedures. Contact the installation environmental management office for guidance. Use properly marked, covered metal containers for storing clean rags.

5.3. Packing Supplies. Store excelsior, straw, shredded paper, and other packing materials in isolated fire-resistant buildings. Store small supplies of packing materials, which are kept in shops for immediate use, in metal or noncombustible covered containers. Remove protruding nails, brads, and staples from crates, cases, packing boxes, casks, boards, and lumber to prevent injury to personnel.

5.4. Electric Buffing Machines. Ensure electric buffing machines are equipped with "deadman" control switches. Unless the machines are double insulated, ensure electrical cords include three-prong plugs to ensure positive ground.

5.5. Walls and Ceilings. Keep projections from walls to a minimum. Maintain ceilings in good repair and free of loose plaster.

5.6. Stacking Materials. Stack materials so they may be easily reached but do not protrude into aisles or passageways. Use crossties, separators, or dunnage to prevent objects from falling or toppling over. When materials are stacked to a height of less than 15 feet, maintain an 18-inch clearance below ceiling -sprinkler deflectors, joists, rafters, beams and roof trusses. If the stack is over 15 feet in height increase the clearance to 36 inches. Position all stacks of materials to ensure an 18-inch clearance around light or heating fixtures or follow manufacturer's instructions, regardless of height. See Air Force Manual (AFMAN) 23-210, *Joint Service Manual (JSM) For Storage and Materials Handling*, for additional information.

5.7. Lighting Fixtures. Fluorescent light fixtures that are not designed with self-locking tubes will have shields, clamps, or other devices installed to keep the tubes from inadvertently falling out of the fixture.

5.8. Trash:

5.8.1. Garbage cans should be covered securely when not being actually filled or emptied.

5.8.2. Trash and garbage cans will be leak-proof and adequate in number and size.

5.8.3. If the garbage disposal area is adjacent to or part of the general receiving area, there will be a program that keeps floors and (or) dock areas clear of refuse and waste.

5.8.4. Garbage containers will be positioned in a proper rack. Heavy garbage containers will be moved on dollies to eliminate as much lifting as possible.

5.8.5. Garbage cans shall be washed and sanitized weekly with hot soapy water.

Figure 5.1. Housekeeping Checklist.

F5.1. This is not an all inclusive checklist. It, like all the checklists in this standard, simply highlights some critical items in the corresponding chapters. Other requirements exist that are not included in the checklist. Where appropriate, MAJCOMs, FOAs DRUs, local safety staffs, and supervisors will add to this checklist to include command or individual location or shop-unique requirements or situations.

F5.2. Are floors and walking surfaces kept free of potential tripping hazards such as tools, electrical cords, air hoses, materials and liquids? (Reference **5.1.**)

F5.3. Are noncombustible containers with self-closing lids provided for the disposal of combustible wastes, soiled rags, and other flammable materials. (Reference **5.2.**)

F5.4. Are packing materials such as excelsior (fine wood shavings), packing straw and shredded paper kept to a minimum in the immediate work area with bulk supplies stored in an isolated fire resistant building? (Reference **5.3.**)

F5.5. Are protruding nails, brads, and staples removed from packing materials to prevent injury to personnel? (Reference **5.3.**)

F5.6. Are aisles and passageways kept clear of stacked materials? (Reference **5.6.**)

F5.7. When materials are stacked less than 15 feet high is an 18-inch clearance maintained below fire protection sprinkler heads, rafters, joists, beams, and roof trusses. **NOTE:** If materials are stacked higher than 15 feet increase the clearance to 36 inches. (Reference **5.6.**)

F5.8. Are trash and garbage cans adequate to ensure that floors and work areas are kept clear of refuse and waste? (Reference **5.8.3.**)

Chapter 6

FIRE PROTECTION

6.1. Hazards:

6.1.1. General. The maintenance and operation of portable fire extinguishers and fire suppression systems may involve exposure to toxic fire extinguishing agents. Breathing toxic gases and skin contact with or ingestion of toxic liquids is hazardous to your health. The severity of the hazard depends upon the chemical, its concentration, and the condition of its use. Additionally, all fires produce toxic decomposition products, some of which are toxic gases. Fires also consume available oxygen and produce high temperatures. It is important that all personnel receive training in the proper use of available portable fire extinguishers and fixed fire suppression systems.

6.1.2. Testing, Inspections, and Maintenance. Fire detection, suppression, and alarm systems, including fire hydrants, are subject to failure if not properly tested, inspected, and maintained. Inspection, test, and maintenance (ITM) program are conducted in accordance with Uniform Facility Criteria (UFC) 3-600-02, *Maintenance of Fire Protection Systems*. When a required fire protection system is out of service for more than 4 hours in a 24-hour period, the fire protection authority shall be notified and the building shall be evacuated or the user/occupant shall establish a fire watch approved by the fire protection authority for all areas left unprotected by the out-of-service system until the system has been returned to service. (NFPA 101, *The Life Safety Code,* 9.6.1.8 & 9.7.6.1.)

6.1.3. Extinguishing Agents:

6.1.3.1. Bromotrifluoromethane (Halon 1301) agent vapors are relatively non-toxic except at high vapor concentrations. However, they decompose when exposed to heat and produce products that can be hazardous, especially in small, confined spaces.

6.1.3.2. Bromchlorodifluoromethane (Halon 1211) and other Halon agents are also used in engine nacelle and other nonhabitable compartment fire suppression systems. All these halons should be considered as toxic and are not approved for use in flooding applications in occupied locations. These agents should all be handled with care, and inhalation of their vapors should be avoided.

6.1.3.3. Carbon dioxide, when used in concentrations sufficient to extinguish a fire, will displace the oxygen supply and make the area incapable of supporting life. A vapor cloud may reduce visibility.

6.1.3.4. Water presents shock and electrocution hazards if used on fires involving energized electric equipment.

6.1.3.5. Dry chemical agents can reduce visibility when used in small, unventilated areas. It is a fine powder and is composed of sodium bicarbonate, potassium bicarbonate, urea-based potassium bicarbonate, chloride, or monoammonium phosphate. It may clog filters in air-handling systems and leave a residue. Dry chemical agents are considered nontoxic from a physiological point of view. However, they may produce mild irritation to the eyes and, in heavy concentrations, cause breathing difficulty.

6.1.3.6. Liquid nitrogen systems displace oxygen when discharged and will not support life when used in sufficient concentration to extinguish a fire. Personnel occupying such spaces after Nitrogen Fire Protection Systems discharge may lose consciousness due to oxygen deficiency.

6.2. General Requirements:

6.2.1. Assembly Facilities. Managers of assembly facilities:

6.2.1.1. Establish and maintain a certification system to ensure employees have been trained and understand their fire prevention and protection responsibilities within the work environment. This certification system includes documented annual training of employees and the immediate indoctrination of newly hired employees. Coordinate and obtain approval of this training program with the fire protection authority. **NOTE:** Building evacuation procedures (in Services facilities) maybe be practiced without actual participation of patrons.

6.2.1.2. Make sure the facility is in a fire-safe condition at the close of business.

6.2.1.3. Conduct and document daily closing inspections.

6.2.1.4. Maintain occupant load information in the manager's office. Every room constituting an assembly occupancy and not having fixed seats shall have the occupant load of the room posted in a conspicuous location near the main exit from the room. The maximum occupant load shall be calculated based on the actual exiting capacity of the corridors, aisles, stairs, doors, and other egress components, but may be exceed one person for each 5-ft² (0.46-m²).

6.2.1.5. Notify the installation fire prevention section of all major social events when temporary decorations or unusual arrangements exist.

6.2.2. Commercial Cooking Facilities**.** Commercial cooking facilities shall be maintained as outlined here to prevent the loss of US Air Force resources.

6.2.2.1. Commercial cooking equipment is provided with a system for smoke and grease-laden vapor removal. An automatic fire suppression system is required to protect the cooking equipment, ducts, and grease-removing devices. These systems shall be operational at all times except for scheduled inspection, test, and routine maintenance. If any one of the systems is out of service for any reason, equipment protected by that system will not be used. Activation of the fire suppression system will automatically shut down cooking equipment, sound the fire alarm, and signal the fire department.

6.2.2.2. Managers of these facilities shall establish and enforce the following procedures:

6.2.2.2.1. Grease filters shall be installed in all grease hoods and extraction systems covering cooking equipment. The filters shall be continually maintained in proper operating condition and shall fit properly. Cooking will not be permitted without the filters installed. Spare filters will be available for cooking facilities that operate continuously.

6.2.2.2.2. All installed grease filters and exposed surfaces of hoods shall be thoroughly cleaned daily and more often as necessary to prevent grease buildup.

6.2.2.2.3. Hood and exhaust ducts serving cooking equipment shall be thoroughly cleaned every 6 months, or more frequently when determined by the fire prevention authority. This cleaning cycle includes grease accumulation on fans, roofs, louvers, exterior walls, cupolas, etc., where the system exhausts to the outside. When cleaning is complete, all electrical controls, detection devices, and system components shall be returned to an operable state by qualified personnel. Cover plates shall be replaced and dampers and diffusers shall be positioned for proper air flow. Specific guidance for cleaning is outlined in NFPA 96, *Standard for Ventilation Control and Fire Protection of Commercial Cooking Operations*.

6.2.2.2.4. The exhaust system shall continually operate while the cooking equipment is in use. If an exhaust fan is shut down or removed for repair or replacement, equipment served by that exhaust system shall not be used until the fan is returned to full service.

6.2.2.2.5. Portable or temporary cooking equipment that uses grease or oil, such as donut machines and portable deep-fat fryers, shall be located beneath an installed fire extinguishing system.

6.2.2.2.6. Deep fat fryers shall be equipped with a primary thermostat of 400 degrees Fahrenheit (F) and a secondary thermostat that limits the temperature of the liquid to 475 degrees F. This 475 degree maximum temperature includes the additional rise that occurs after the secondary thermostat de-energizes the unit. Thermostats shall be tested annually, or as recommended by the manufacturer, and after repair by civil engineering or contractor. Documentation for testing must be maintain by the facility manager or supervisor. **NOTE:** Units designed with secondary thermostats that do not have a cut-out switch or the destruction of the secondary thermostat would occur if testing were conducted are exempt from the required testing. Documentation of the test shall be affixed to the unit. The disassembly or the transfer of hot liquids to conduct the test is prohibited. The primary thermostat on deep fat fryers shall be provided with a shunt bypass assembly to be accessible to authorized personnel for testing.

6.2.3. Health Care Facilities. Facility managers and (or) safety officers of health care occupancies shall have in effect and available to all supervisory personnel written copies of a fire plan that addresses appropriate staff response to a fire emergency and appropriate education and training for all elements of the fire plan. The plan will address facility-wide needs in response to fire, area specific needs for all areas, training for all staff, employees, and volunteers, and appropriate training for other non-staff personnel to the extent they are required to participate in the fire plan. Facility managers will also ensure fire exit drills are conducted according to NFPA 101.

6.2.4. Portable Fire Extinguishers*:*

6.2.4.1. Fire Protection Authority. The fire protection authority manages the installation fire extinguisher program and is the authority for all matters involving fire extinguishers. The following requirements exist:

6.2.4.1.1. Provide fire extinguishers when required by NFPA 101, *The Life Safety Code*, and any required extinguishers shall be selected, located, inspected, and maintained as required by NFPA 10, *Standard for Portable Fire Extinguishers*. For facilities or areas occupied infrequently, such as boiler and mechanical equipment rooms, the fire protection authority determines extinguisher requirements based on the hazards involved and the probability of fire. Refer to AFMAN 91-201, *Explosive Safety Standards*, for extinguisher requirements in explosive locations.

6.2.4.1.2. Extinguishers are not provided for military family housing (MFH). Should MAJCOMs, DRUs, and FOAs direct installation of extinguishers in MFH procedures will be developed to ensure occupants are trained in their use and extinguishers are maintained as indicated in paragraph **6.2.4.8.**

6.2.4.1.3. Directional arrows may be provided when needed to indicate the location of extinguishers in warehouses or industrial activities where volume of storage in the facility impairs or prohibits extinguisher visibility. Directional arrows, targets, and extinguisher signs should

not be used in other occupancies such as clubs and chapels, dormitories, mercantile occupancies, or other locations where decor is important to the facility's function.

6.2.4.1.4. It is not intended that a fire extinguisher be visible from all locations within a facility. The workplace safety training provided to each employee by the supervisor shall include the location of fire extinguishers.

6.2.4.1.5. The standard for visual inspections of Compressed Gas Cylinders (C-6), published by the Compressed Gas Association (CGA), will be referred to when evaluating the condition of extinguisher cylinders manufactured to meet Department of Transportation (DOT) Specifications (49 Code of Federal Regulations [CFR], Transportation, Part 102).

6.2.4.2. Directives Addressing Fire Extinguishers. Directives in which fire extinguishers are addressed will be coordinated with fire protection offices at the appropriate level.

6.2.4.3. Fire Extinguisher Location. Fire extinguishers shall not be located on vehicles or equipment, or in facilities, unless required by directive (e.g., purchase description, technical orders [TO], AFIs, NFPA 10) or approved by the fire protection authority.

6.2.4.4. Fire Extinguisher Purchase and Maintenance. Facility managers must budget for the purchase and maintenance of fire extinguishers.

6.2.4.5. Worker Responsibilities. All employees are responsible for fire extinguishers in their work area. They will make sure fire extinguishers are not obstructed, are readily accessible, and are used only for the intended purpose.

6.2.4.6. Supervisor Responsibilities. Supervisors are responsible for fire extinguishers in areas under their control. They shall:

6.2.4.6.1. Perform visual inspections of fire extinguishers as indicated in paragraph **6.2.4.7.** of this standard.

6.2.4.6.2. Take defective extinguishers to an authorized servicing location, as determined locally. When fire extinguishers are removed for service, they will be immediately replaced.

6.2.4.6.3. Refer questions regarding fire extinguishers, including the need for type, size, and maintenance, to the fire protection authority.

6.2.4.6.4. Mount fire extinguishers in or on vehicles or equipment in approved/listed brackets, or otherwise secure them, to prevent damage as directed by T.O. or AFI and by local fire authority.

6.2.4.7. Visual Inspection. Functional managers, supervisors, and (or) facility managers shall make sure a visual inspection is performed monthly and documented for all fire extinguishers under their control. Extinguishers with discrepancies will be taken to the designated servicing location. This inspection includes:

6.2.4.7.1. Extinguisher located in designated place.

6.2.4.7.2. No obstruction to access or visibility.

6.2.4.7.3. Operating instructions on name plate legible and facing outward.

6.2.4.7.4. Safety seals and (or) tamper indicators not broken or missing.

6.2.4.7.5. No obvious physical damage, corrosion, leakage, or clogged nozzle.

6.2.4.7.6. Pressure gage reading or indicator in the operable range or position.

6.2.4.7.7. For wheeled units, the condition of the tires, wheels, carriage, hose, and nozzle checked.

6.2.4.8. Maintenance and Tests:

6.2.4.8.1. All fire extinguishers will be maintained and tested at intervals specified in NFPA 10, *Standards for Portable Fire Extinguisher,* TOs, or the manufacturer's instructions.

6.2.4.8.1.1. The using organization will ensure each fire extinguisher not located in real property facilities receives annual maintenance by an authorized servicing agency, (e.g., contractor or fire protection organization). The installation fire protection authority will be contacted for specific guidance.

6.2.4.8.1.2. The fire protection authority is responsible for ensuring maintenance and testing of fire extinguishers located in real property facilities on installations is accomplished.

6.2.4.8.2. Except for large, wheeled extinguishers, transporting extinguishers to the maintenance location is the responsibility of the using organization.

6.2.4.8.3. Halon will not be released into the atmosphere during maintenance and tests. Refer to AFI 32-7086, *Hazardous Materials Management, Chapter 4, ODS Management.* For specific guidance regarding the handling of halon.

6.2.4.9. Fire Extinguisher Records. These records will be maintained as determined by the National Fire Codes and the installation fire chief.

6.2.4.10. Fire Extinguishers. Ensure all personnel know where fire extinguishers are located and what to do in case of fire. Supervisors will instruct personnel on fire extinguisher operation upon initial arrival and annually thereafter. Refer to fire extinguisher training requirements in **Chapter 6** and NFPA 10, *Standards for Portable Fire Extinguisher.*

6.2.5. Fire Detection and Suppression Systems and Alarm Systems:

6.2.5.1. These systems will be maintained according to the National Fire Codes.

6.2.5.2. Rooms and enclosures protected by total flooding Halon, carbon dioxide (CO_2), or similar fire suppressing agents will have caution signs posted outside at all entrances, with the legend "DO NOT ENTER WHEN ALARM IS SOUNDING. HALON 1301 (or CO_2) BEING DISCHARGED." Caution signs will be posted inside the room or space near the alarm device, with the legend "WHEN THE ALARM SOUNDS, VACATE THE ROOM. HALON 1301 (or CO_2) BEING DISCHARGED." These signs will be designed per instructions in **Chapter 21**.

6.2.6. Standpipe and Hose Systems*:*

6.2.6.1. Standpipe and hose system shall be kept free from obstructions and used only for the intended purpose. Only fire protection equipment will be stored in hose cabinets.

6.2.6.2. The fire protection authority will determine where these systems are to be used by occupants. When occupants are required to use standpipe and hose systems, they will be trained according to paragraph **6.2.10.**

6.2.6.3. Standpipe hose is tested according to NFPA 1962, *Standard for the Care, Use and Service Testing of Fire Hose Including Couplings and Nozzles.* Unlined hose is prohibited on standpipe systems provided for occupant use. Standpipe hose shall be equipped with shut-off type nozzles.

6.2.7. Fire Hydrants**.** Fire hydrants will be installed and maintained as required by Military Handbook 1008 (latest edition), *Fire Protection for Facilities Engineering, Design, and Construction*.

6.2.8. Smoke Detectors in Family Housing:

6.2.8.1. These units are installed in all MFH units according to HQ AFCEE, Military Family Housing Design Guide.

6.2.8.1.1. The sponsor of each MFH unit is responsible for a monthly test and examination of all household warning devices installed within the quarters. The test and examination of these devices shall include:

6.2.8.1.1.1. Inspecting the physical appearance of the devices for evidence of damage, abuse, tampering, or other indications that may render it inoperative.

6.2.8.1.1.2. Ensuring the units are securely mounted.

6.2.8.1.1.3. Conducting an operational test according to the manufacturer's guidance to ensure the audible alarm is working.

6.2.8.1.2. Vacant units will not be reoccupied if the household fire warning system is not functioning properly.

6.2.8.1.3. The occupant will be provided a brochure, detailing detector testing and maintenance procedures, by the installation housing office.

6.2.8.2. At change of occupancy, smoke detector maintenance will be conducted in accordance with UFC 3-600-02. Deficient operation or faulty equipment shall be reported to the agency responsible for maintenance.

6.2.9. Life Safety. Functional managers, supervisors, and building managers are responsible for keeping facilities in a condition that provides a safe workplace according to NFPA 101, *The Life Safety Code*. Fires in facilities can result from a multitude of circumstances, but can usually be attributed to the improper use, selection, or placement of heaters, coffee pots, holiday decorations, and improper storage or improper disposal of flammable and combustible materials. Following are specific requirements for fire protection:

6.2.9.1. Smoking Restrictions. Smoking is not allowed inside Air Force buildings. Contact the installation fire protection authority for designation of approved smoking areas.

6.2.9.2. Disposal of Smoking Material.

6.2.9.2.1. Provide an adequate number of ashtrays for every authorized smoking area.

6.2.9.2.2. Provide ash receptacles or smoking material cans at the entrance to all NO SMOKING areas.

6.2.9.2.3. The disposal of smoking material in any container, other than a metal container with a self-closing metal lid provided for that sole purpose, is strictly prohibited. Stencil these metal containers or cans "SMOKING MATERIAL ONLY."

6.2.9.2.4. The disposal of waste, trash, or any combustible material into ashtrays or smoking material cans is prohibited.

6.2.9.2.5. Smoking material. Saturate and completely extinguish smoking material prior to disposal into outside waste dumpsters.

6.2.10. Heat Producing Appliances.

6.2.10.1. Use UL-listed or host nation equivalent space heaters equipped with automatic shut-off devices that will shut off the heater if it tips over. Space heaters should also have an overheat protection device and an automatic thermostat control and must be disconnected when not in use.

6.2.10.2. Plug space heaters directly into a wall receptacle. Do not plug space heaters into multiple outlet strips. An extension cord with a space heater must be avoided.

6.2.10.3. Maintain an 18 inch minimum distance between any heat producing appliance and combustibles.

6.2.10.4. The use of portable space heaters must be in accordance with the manufacturers' specifications.

6.2.10.5. Do not leave these devices unattended when in use and unplug them at the end of the day or shift.

6.2.10.6. The use of space heaters in any hazardous location is prohibited.

6.2.11. Coffee Pots:

6.2.11.1. Keep coffee pots and the area around them free of combustibles.

6.2.11.2. Unplug coffee pots at the end of the day.

6.2.12. Heating Systems.

6.2.12.1. Heating devices, such as furnaces or heaters, must be kept clear of combustible and flammable material.

6.2.12.2. All heating equipment must be in good repair.

6.2.12.3. All heating, boiler, air conditioning, air handling, and mechanical rooms should be secured. Only fire protection, Civil Engineer, or authorized personnel will have access to these areas.

6.2.13. Decorations.

6.2.13.1. Electric string lights and wiring must be UL (or equivalent) approved and in good operating condition.

6.2.13.2. Unplug all electrical decorations when building is unoccupied.

6.2.13.3. Decorations will be noncombustible or fire retardant.

6.2.13.4. Larger decorations (Christmas Trees or fake fireplaces), if authorized will not block exits or paths of egress.

6.2.13.5. Decorations utilizing an open flame are prohibited.

6.2.14. Fire Alarm Systems. Make sure all personnel are familiar with the fire alarm systems, including how to report an emergency and how to activate the fire alarm system. At no time shall a fire detection, suppression, or alarm system or device be painted, blocked, or obstructed in any manner.

6.2.15. Emergency Evacuation Procedures:

6.2.15.1. Establish an emergency action plan. **NOTE:** Employees should know primary and secondary escape routes for every area of the building.

6.2.15.2. Ensure escape routes are kept free of obstruction--to include stairways and office doors. Ensure doors leading outside can be opened easily.

6.2.15.3. Consult local fire prevention officials to determine requirements for practice fire evacuation drills. Ensure new personnel are trained in the accepted evacuation procedures.

6.2.15.4. Personnel will IMMEDIATELY evacuate the building whenever the fire alarm sounds (unless advised in advance of work or non evacuation testing is being conducted on the fire alarm system).

6.2.15.5. Do not use elevators during evacuation; use the stairs.

6.2.15.6. Establish a predetermined area for personnel to gather after evacuation so personnel can be accounted for. To cut down on confusion, different predetermined meeting locations should be established for smaller groups within the total organization, for example--each division will meet in a different place.

6.2.15.7. Appoint people to act as Emergency Action Procedures having the responsibility to account for personnel at the predetermined meeting area--this will help determine who may or may not still be in the building for the emergency response personnel. Appoint an alternate leader in case the primary leader is not in the building at the time of the emergency--or is unable to evacuate the building for some reason.

6.2.15.8. Assign workers to assist people in wheelchairs or anyone else who would have difficulty descending stairs on their own. Also, make sure people with hearing or sight problems know they are to evacuate--assign someone to help them evacuate and report to the designated meeting area, if necessary.

6.2.16. Safety, Fire Prevention, and Health On-the-Job Training**.** Training will be as required by AFI 91-301.

6.2.17. Employees shall be knowledgeable of the following but not limited to:

6.2.17.1. The fire evacuation signal in their work area.

6.2.17.2. The fire suppression system signal (if different from fire evacuation signal).

6.2.17.3. Other evacuation signals in their work area (if provided).

6.2.17.4. Specific actions to take when becoming aware of a fire or other emergency.

6.2.17.5. When to manually activate fire suppression systems (if provided).

6.2.17.6. Specific actions required to activate fire suppression system (if provided)

6.2.17.7. Specific actions to activate emergency evacuation signaling systems.

6.2.17.8. Primary and secondary egress routes from all work areas.

6.2.17.9. Location of fire extinguishers (if provided).

6.2.17.10. When and how to use fire extinguisher (if provided).

Figure 6.1. Fire Protection and Prevention Checklist.

F6.1. This is not an all inclusive checklist. It, like all the checklists in this standard, simply highlights some critical items in the corresponding chapters. Other requirements exist that are not included in the checklist. Where appropriate, MAJCOMs, FOAs DRUs, local safety staffs, and supervisors will add to this checklist to include command or individual location or shop-unique requirements or situations.

F6.2. Are personnel who work in assembly facilities trained initially and annually thereafter on their responsibilities for fire protection and prevention? (Reference **6.2.1.1.**)

F6.3. Are all commercial cooking facilities provided with a system to remove smoke and grease-laden vapors? (Reference **6.2.2.1.**)

F6.4. Are grease ducts and grease removal systems protected by automatic fire suppression systems? (Reference **6.2.2.1.**)

F6.5. Are grease filters installed in all hoods and extraction systems? (Reference **6.2.2.2.1.**)

F6.6. Are the filters and hoods cleaned at least daily, with thorough cleaning of hood and exhaust ducts every 6 months? (Reference **6.2.2.2.3.**)

F6.7. Are deep fat fryers equipped with a primary thermostat of 400 degrees F and a secondary thermostat of 475 degrees F? (Reference 6.2.2.3.)

F6.8. Are these thermostats tested annually and after any repairs? (Reference 6.2.2.3.)

F6.9. Has a written fire plan been developed for the health care facility and does it include appropriate staff response to fire emergencies and requirements for education and training? (Reference **6.2.3.**)

F6.10. Are fire extinguisher visual inspected monthly to detect and correct discrepancies? (Reference **6.2.4.7.**)

F6.11. Are caution signs posted both inside and outside rooms or enclosures protected by total flooding halon, $C0_2$, or similar fire suppressing agents? (Reference **6.2.5.2.**)

F6.12. Do hose cabinets of standpipe and hose systems contain only fire protection equipment? (Reference **6.2.6.1.**)

F6.13. Is training accomplished per the requirements of AFI 91-301? (Reference **6.2.15.** & **6.2.17.**)

Chapter 7

WALKING SURFACES, GUARDING FLOOR AND WALL OPENINGS, FIXED INDUSTRIAL STAIRS, AND PORTABLE AND FIXED LADDERS

7.1. General Information. Essential regulatory requirements contained in this chapter are: Occupational Safety and Health Administration (OSHA) 29 Code of Federal Regulations (CFR) Part 1910, *Subpart D, Walking-Working Surfaces*, 1910.21 - 1910.30. Subpart E, 1910.37, *Means of Egress-General. Subpart N*, 1910.176, Handling Materials - General. Subpart S, 1910.303, *Electrical-General Requirements*; and 1910.333, *Selection and Use of Work Practices*. OSHA cross-references are included at the end of applicable paragraphs. It also contains material not addressed in OSHA Standards. Military Specifications (Mil Spec) are provided as a reference source only. Local supply representatives may provide assistance if additional information regarding Military Specifications is needed.

7.2. Hazards and Human Factors associated with Walking and Working Surfaces . Walking and working surfaces are the sources of many injuries and property damage mishaps. Relatively safe areas become hazardous because people fail to correct known deficiencies. The most common mishap is people falling as the result of slipping or tripping. Good design and maintenance, together with proper lighting, all contribute to a safe walking or working surface. Then it becomes the responsibility of the individual to wear proper footwear and to use walking surfaces in a safe manner. The primary reasons for walking surface mishaps are:

7.2.1. Physical Hazards:

7.2.1.1. Poor Housekeeping. Obstacles in walk areas, liquid spills, sawdust accumulations, and the use of slippery surface cleaners.

7.2.1.2. Dangerous Surface Condition. Cracks or holes, protruding nails, broken surface materials, slippery finishes, surfaces of different elevations, and improper design for the use intended.

7.2.1.3. Inadequate Lighting. Incorrect or insufficient lighting to make walking surfaces and obstacles visible.

7.2.2. Human Factors. Inattention to tasks, running, improper footwear (oversized heels and worn or slick soles), fatigue, and lack of familiarity with the work area are some of the causes for mishaps.

7.3. Requirements:

7.3.1. Interior Walking and Working Surfaces:

7.3.1.1. Layout. Proper layout, spacing, and arrangement of equipment, machinery, passageways, and aisles are essential to orderly operations and to avoid congestion. Good layout can best be achieved in the design stage, with recommendations from the installation ground safety, fire protection, bioenvironmental engineering (BE), environmental health services (EHS), and civil engineering (CE) representatives. Whether a facility is in the design stage, being remodeled, or repositioning of equipment and machinery is required, basic layout considerations are important factors in planning a facility for safe operations. All interior walking and working surfaces which are part of the means of egress shall comply with the requirements of National Fire Protection Association (NFPA) 101, *The Life Safety Code*.

7.3.1.1.1. Equipment and machinery will be arranged to permit an even flow of materials. Sufficient space should be provided to handle the material with the least possible interference from or to workers or other work being performed. Machines will be placed so it will not be necessary for an operator to stand in a passageway, aisle, or exit access. Additionally, machine positioning should allow for easy maintenance, cleaning, and removal of scrap. After the initial positioning of equipment and machines is decided, clear zones (workspaces) shall be established. These clear zones should be of sufficient dimensions to accommodate typical work. If material exceeds established clear zones, rope and stanchions may be used to temporarily extend the workspace. Marking of machine clear zones is optional. Installation ground safety officials and the shop supervisor will determine machine shops that need clear zones marked based upon hazard potential. Yellow or yellow-and-black hash-marked lines, 2 to 3 inches wide will be used when marking is necessary.

7.3.1.1.2. Passageways, aisles, and exit accesses shall be provided to permit the free movement of employees bringing to and removing material from the shop. These passageways are independent of clear zones and storage spaces. They will be clearly recognizable. Markings will be used unless the number of workers and location of machines precludes this requirement. In these cases the installation ground safety personnel will approve the exclusion. Floor markings should provide a contrast to the floor color, such as yellow lines 2 to 3 inches wide on a gray floor.

7.3.1.1.3. Where powered materials handling equipment (lift truck, etc.) is used, facility layout shall provide enough clearance in aisles, loading docks, and through doorways to permit safe turns. Obstructions that could create hazards will not be permitted in aisles. Aisles should be at least 2 feet wider than the widest vehicle used or most common material being transported. (OSHA 29 CFR 1910.176, *Handling Materials-General*)

7.3.1.1.4. Aisles should be at least 36 inches wide to permit free movement of workers, equipment, and supplies. A minimum of at least 18 inches will be provided for passageways formed by or between movable obstructions. (NFPA 101, *The Life Safety Code*)

7.3.1.1.5. Sufficient access and working space shall be provided and maintained around all electrical equipment. (OSHA 29 CFR 1910.303, *General Requirements-Electrical*)

7.3.1.2. Condition. Aisles and passageways shall be kept clear and in good repairs, with no obstruction across or in aisles that could create a hazard. Floors shall be kept in good condition and free of defects that can endanger workers or interfere with the handling of materials. Floors will not have obstructions which would create a tripping hazard or hinder people leaving the area during emergencies. (OSHA 29 CFR 1910.22, *General Requirements-Walking Working Surfaces*)

7.3.1.2.1. Every floor, work area, aisle, and passageway will be maintained free from protruding nails, splinters, holes, loose boards, and (as much as possible) in a dry condition.

7.3.1.2.2. Floors of all shop areas, service rooms, halls, and storerooms shall be kept clean, free of oil, grease, gasoline, water, and other slippery substances. When slippery substances are spilled, they shall be immediately cleaned or covered with a noncombustible absorbent material. Drip or oil pans will be used whenever the possibility of spilling or dripping exists. (OSHA 29 CFR 1910.22, *General Requirements – Walking Work Surfaces*)

7.3.1.2.3. Floors shall not be cleaned with flammable liquids. When toxic cleaning agents are required, adequate ventilation and (or) respiratory protection shall be provided. Combustible

or explosive dust should be eliminated at the source. If this is not possible, it should be minimized during sweeping by spreading a noncombustible sweeping compound over the floor.

7.3.1.2.4. After floors have been properly cleaned, nonskid finishing compounds may be used. In some locations, such as electroplating shops, finishing compounds should not be applied due to the possibility of a reaction to chemicals used during the processing.

7.3.1.2.5. Whether floors are being cleaned or finishing compounds are being applied, signs will be posted to warn workers of a slipping hazard and will remain in place until floors have dried. The size and placement of these signs will be at the discretion of the supervisor, but shall be visible to those entering the hazardous area. These caution signs will be yellow with black lettering.

7.3.1.2.6. Areas which are constantly wet will have nonslip surfaces where personnel normally walk or work. Signs will be posted stating "Caution Wet Floors."

7.3.1.2.7. Passageways, aisles, and exit accesses shall be kept clear for easy access to emergency equipment and to enable fire fighters to reach a fire. Additionally, areas adjacent to sprinkler control valves, fuse boxes, and electrical switch panels shall not be obstructed. NFPA Standard 70, *The National Electrical Code* (NEC), and other NFPA standards contain information on clearance distances.

7.3.1.3. Loading Capacity. Supervisors shall ensure that equipment weight and distribution comply with maximum floor loading capacity for all above grade (including areas above basement) storage areas. This capacity is determined by the installation CE. The weights of equipment, such as hoists suspended under a floor, will also be considered when determining floor loading capacity. The supervisor will have signs that identify the floor load capacity permanently installed in plain view of all workers. The installation CE will approve the installation of all equipment weighing more than 500 pounds in any multi-story building. Supervisors will ensure heavy loads are evenly distributed according to the floor’s safe load limit. (OSHA 29 CFR 1910.22, *General Requirements – Walking Work Surfaces*)

7.3.1.4. Floor Sloping, and Drains: Adequate floor drainage must be considered when floors are subject to wet processes. When floors are subject to water, moisture, or other liquids such as those found in aircraft maintenance functions, battery shops, and kitchen areas, floor drains are required. Floors shall be sloped to allow liquids to naturally flow to the drains. Drains shall be kept clear to prevent clogging especially when hazardous or contaminated materials are present. All new construction shall provide for drains in wet process areas. If drains are not available, wet areas will be immediately roped off, cleaned up, and dried before permitting other personnel to enter the area. False floors, platforms, mats, or other dry standing places shall be provided where practicable. Protective footwear for wet slippery surfaces shall be provided where appropriate.

7.3.1.5. Illumination. All aisles, passageways, and work areas will be adequately lighted. The installation bioenvironmental engineer (BEE) shall be consulted for guidance on adequate lighting for specific locations; however, a minimum of 5-foot candle illumination shall be provided at the surface in all work areas. When fluorescent lighting fixtures are used, supervisors will ensure that any stroboscopic effect with moving machinery is avoided.

7.3.1.6. Guards for Floor and Wall Openings. Every floor opening, such as a hatchway, chute, pit, trap door, manhole, and ladderway shall be guarded. The type of guard used is dependent on the

location, reason for the opening, and frequency of use. One of the following guards shall be installed: (OSHA 29 CFR 1910.23, *Guarding Floor and Wall Openings and Holes*)

7.3.1.6.1. Standard Railings and Toeboards:

7.3.1.6.1.1. These railings and toeboards will be permanently attached leaving only one exposed side. The exposed side will have a removable railing. When the exposed side is not in use, the railing will be left in place. For specific detail on construction and installation, OSHA 29 CFR 1910.23, *Guarding Floor and Wall Opening and Holes*, will be used.

7.3.1.6.1.2. Toeboards are required wherever falling objects may present a hazard. Toeboards can be constructed of any 4-inch high rigid material, either solid or with openings not greater than 1 inch. They will be securely fastened in place with not more than one-fourth inch clearance from the floor except at the entrance of the opening. (OSHA 29 CFR 1910.23, *Guarding Floor and Wall Opening and Holes*)

7.3.1.6.2. Floor Opening Cover. For less frequently used openings where traffic across the opening prevents the use of fixed railings, such as openings located in aisle spaces, a cover will be used. In addition, covers or guards will be used to protect people from the hazards of open pits, tanks, vats, ditches, etc.

7.3.1.6.2.1. Cover strength specifications will have at least the same rated load capacity as the floor.

7.3.1.6.2.2. Cover design, installation, and related hardware will not present a tripping hazard.

7.3.1.6.2.3. The cover will be in place when the opening is not in use. The opening will be protected by removable railings leaving only one exposed side when the cover is open or removed. There shall be someone in constant attendance at the exposed side whenever the worker is not present.

7.3.1.7. Guards.

7.3.1.7.1. Every stairway and ladderway opening will be guarded by standard railings and toeboards on all open sides, except at the entrance of the opening. If there is danger of a person walking straight into the opening, a swinging gate or offset passage will be used.

7.3.1.7.2. Every covered opening in a surface, such as a skylight floor opening, shall be guarded by a skylight screen or standard railing with toeboards on all exposed sides. Skylight screens designed of grillwork or slatwork when installed will be capable of withstanding a load of at least 200 pounds applied at any area of the screen. (OSHA 29 CFR1910.23, *Guarding Floor and Wall Opening and Holes*)

7.3.1.7.3. All open-sided floors, platforms, and runways 4 feet or more above the ground or floor shall be guarded by a standard railing on all open sides. EXCEPTION: Where there is an entrance to a ramp, stairway, or fixed ladder. Collapsible or removable sections of railings may be installed on a runway. These sections will only be removed when a special task such as oiling, shafting, or filling tank cars is being performed and other protective measures, approved by the installation ground safety officials, are used. Railings shall be reinstalled when the task has been completed.

7.3.1.7.4. Every permanent or temporary wall opening (to include windows) located less than 3 feet above the floor (where there is a 4 foot or more drop) will be guarded. Guards include railings, doors, slats, grillwork, half-doors, or equivalent protection. The guard may be removable, but will be installed when the opening is not in use. A toeboard will be installed when falling materials may present a hazard. Grab handles shall be installed on each side of the opening when the operation requires reaching through or around the unprotected opening. (OSHA 29 CFR 1910.23)

7.3.1.7.5. Guard railings consist of securely mounted top rails, intermediate rails, and posts. They have a height of 36 to 44 inches from the floor. Heights greater than 44 inches are permissible, but may require midrailings if the opening beneath the top rail is 19 inches or greater. Screens, mesh, vertical posts, or panels may be used in place of midrails, provided the material used can withstand a force of at least 200 pounds. (OSHA 29 CFR 1910.23)

7.3.2. Exterior Walking and Working Surfaces. The proper layout and condition of exterior surfaces is important to the safe and efficient movement of people and equipment. The placement of walkways and parking areas is controlled by the installation CE. However, changes in workplace requirements, weather conditions, and an increase in assigned personnel strength could involve the supervisor in rerouting pedestrian or equipment traffic. Following are basic layout and condition requirements for exterior walking and working surfaces.

7.3.2.1. Loading Docks. Frequently used loading docks should be located away from principal streets and intersections. Vehicles parked at docks will not block general vehicular traffic unless control devices, such as cones, barricades, or warning signs, are used to redirect traffic. Loading dock over 4 feet high required railing, see paragraph **7.3.1.7.4.**

7.3.2.1.1. The surfaces of docks will be smooth and even. Where necessary, aisleways should be marked. Edges of docks will be marked when there is a chance of workers falling. Markings will be 4-inch wide yellow lines. Where the potential exists for serious injury, removable railings will be used.

7.3.2.1.2. The width of a dock will be 2 feet wider than the widest vehicle or more common material being transported. Additional clearance will be provided to permit safe turns.

7.3.2.2. Parking Lots. The surface of parking lots should be smooth, have good drainage, and be free of pedestrian tripping hazards. Stony or rough ground should be avoided. Walkways should be provided. Entrances and exits will not have obstructions that block a driver's or pedestrian's view of traffic. Supervisors should contact the installation ground safety office and installation CE for more detailed information. Specifications for signs are contained in AFPAM 32-1097, *Sign Standards*.

7.3.2.3. Walkways. Exterior walkways will be kept clear of obstacles that block the right-of-way or present slipping and tripping hazards. Facility managers are responsible for the removal of accumulated snow or ice. Abrasive materials, such as salt or other snow melting material, will be used on walking surfaces when it is impractical or impossible to remove snow and (or) ice. Night lighting will be used to highlight hazards. When loose gravel or crushed rock is used for surfacing, the largest dimensions of material used will not exceed one-half of an inch. Motorized vehicles should not be operated over elevated walkways unless the load bearing capacity of the walkway will support the vehicle's weight. Broken or uneven cracked surfaces will be repaired.

7.3.2.4. Grounds. All grounds adjacent to work areas will be kept free of hazardous materials, trash, weeds, and unguarded pits, openings, or obstacles.

7.3.2.4.1. Materials will not be stored, left under, or piled against buildings, doors, exits, or stairways.

7.3.2.4.2. During the growing season frequent lawn mowing and edging is necessary to keep installation grounds in good condition. Poisonous or toxic plants will not be used for landscaping without prior approval of the installation medical services. Weeds will not be permitted to grow excessively or to accumulate. Trees and bushes adjacent to walkways will be trimmed to permit a clear path for pedestrians.

7.3.2.4.3. All open drainage ditches that present a hazard will be clearly identified in the daytime, guarded by fences or barriers, and illuminated or marked with warning flashers at night.

7.3.2.5. Construction. All construction work will be clearly identified by signs that can be read from at least 50 feet, in addition to barriers marked with night reflective materials. Illumination or warning flashers will also be used for easy sighting after dark.

7.4. Fixed Industrial Stairs and Ramps: NOTE: OSHA 29 CFR 1910.24, *Fixed Industrial Stairs*, was based on the 1970 edition of NFPA 101, *Life Safety Code*, which has been revised numerous times since 1970. OSHA has agreed that egress components such as stairs, ramps, guard rails, or hand rails that are constructed to any post-1970 edition of NFPA 101 will meet the intent of 29 CFR 1910.24 and are acceptable.

7.4.1. Hazards and Human Factors Associated with Fixed Industrial Stairs and Ramps. Many injuries that occur each year in the Air Force are the result of falls; most take place when people move from one level to another on stairs or ramps. Proper design and construction will help prevent these falls. Other aids, such as fixed handrails, reduce the threat of slips. Poor lighting or housekeeping, faulty treads, and slippery surfaces are unsafe conditions which often lead to injuries. Others result when people run up or down stairs, fail to use handrails, wear shoes with slippery soles and (or) heels, or are careless.

7.4.2. Requirements. The selection of a particular type of fixed industrial stairway or ramp over another is dependent upon the location, intended use, and existing environmental conditions. The selection of stairways and ramps is normally performed by the installation CE with recommendations from the installation ground safety staff and fire department representatives. The main concern of a supervisor should be the construction and maintenance of installed industrial stairs, ramps, and inclined ladders.

7.4.2.1. Design Consideration. Stairway and ramp designs are important to the supervisor. They may have been based on the prior use of a facility, whereas the current use may dictate modifications or replacement of components. This could include changing the width, angle of rise, length and vertical clearance, as well as increasing load bearing capacity, inclusion of railings, or enclosing open risers. The following minimum specifications and requirements shall be used for inspection criteria. They should be supplemented as necessary with specific design criteria available through the installation CE and ground safety offices.

7.4.2.2. Strength. Fixed stairs and ramps will be designed and built to carry a load of five times the normal live load anticipated but never of less strength than to safely carry a moving concentrated load of 1,000 pounds. (OSHA 29 CFR 1910.24, *Fixed Industrial Stairs*)

7.4.2.3. Width. Fixed stairs, if part of the exit access, shall have a minimum width of 36 inches if the occupant load of the building or structure is less than 50 persons. If the occupant load is greater than 50, the minimum stair width is 44 inches. Fixed ramps, if part of the exit access, shall have a minimum width of 44 inches. The authority having jurisdiction may reduce this requirement to 30 inches in certain cases. For ramps or stairs not part of the exit access, a minimum width of 22 inches shall be provided. (NFPA 101, OSHA 29 CFR 1910.24)

7.4.2.4. Angle of Rise. Stairs must meet the requirements of NFPA 101. Fixed stairs not part of the exit access shall be installed at angles to the horizontal of between 30 degrees and 50 degrees. For existing stairs that are part of the exit access, a maximum riser height of 8 inches and minimum tread depth of 9 inches is allowed. Tread depth and riser height must be consistent throughout a new facility with a riser height ranging between 4 to 7 inches and a minimum tread depth of 11 inches. Tread depth and riser heights must also be consistent throughout a staircase. Where the slope is less than 30 degrees, a ramp with a non-slip surface should be installed. Any uniform combination of rise and (or) tread dimensions may be used. (**Table 7.1.** contains recommended dimensions; however, the rise and (or) tread combinations are not limited to those given.) (OSHA 29 CFR 1910.24)

7.4.2.5. Ramps. Ramps not part of the exit access will be installed following the guidance in **Table 7.2.** For ramps that are part of the exit access, a maximum slope of 1 to 8 inches is allowed and shall meet the requirements of NFPA 101.

7.4.2.6. Width of Landings. Landings and platforms not part of the exit access will be no less than the width of the stairs and a minimum of 30 inches in length, measured in the direction of travel (OSHA 29 CFR 1910.24). When doors or gates open directly onto a stairway, they shall not reduce the available width of the landing to less than 20 inches. For landings in stairs or ramps that are part of the exit access, the requirements of NFPA 101 shall be met.

7.4.2.7. Vertical Clearance. Where there is less than 7 feet of headroom over stairs, obstructions will be padded. When they cannot be padded, obstructions will be color coded to highlight the hazards. Yellow or yellow-and-black stripes will be used to highlight the hazard. In all cases, caution signs will be used to warn people of low clearances. (OSHA 29 CFR 1910.24)

7.4.2.8. Risers. Stairs having tread depth of less than 9 inches in width should have open risers. Stairs of 9 inches or more may also have open risers. Risers shall be from 6-1/2 to 9-1/2 inches high. Rise height and tread width shall be uniform throughout any flight of stairs including any foundation structure used as one or more treads of the stairs. (OSHA 29 CFR 1910.24). For risers in stairs that are part of the exit access, the requirements of NFPA 101 shall be met.

7.4.2.9. Treads. All treads will be slip-resistant and free of projections or lips that could cause a tripping hazards.

7.4.2.10. Grating. Open grating type treads are desirable for stairs which are not enclosed. The use of open treads prevents the buildup of rainwater and snow on the tread surface.

7.4.2.11. Sidewalk Ramps. Sidewalk ramps should be installed where equipment, such as housekeeping carts or hand trucks are used.

7.4.2.12. Stair Railings and Guards: (OSHA 29 CFR 1910.23 and 1910.24)

7.4.2.12.1. Every flight of fixed industrial stairs that has four or more risers will be equipped with standard guardrails or standard handrails as called for below. The width of the stair will be measured clear of all obstructions except handrails.

7.4.2.12.1.1. Stairs less than 44 inches wide having both sides enclosed will have at least one handrail, preferably on the right side going down.

7.4.2.12.1.2. Stairs less than 44 inches wide having one side open will have at least one guardrail on the open side.

7.4.2.12.1.3. Stairs less than 44 inches wide having both sides open will have one guardrail on each side.

7.4.2.12.1.4. Stairs more than 44 inches wide but less than 88 inches wide will have a handrail on each enclosed side and a guardrail on each open side.

7.4.2.12.1.5. Stairways 88 or more inches wide will have one handrail on each enclosed side, one guardrail on each open side, and one intermediate guardrail built midway of the width.

7.4.2.12.2. Spiraling and winding stairs will have a handrail offset to stop people from walking on the parts of the treads that are less than 6 inches wide.

7.4.2.13. Illumination. Stairs and ramps will be lighted with a minimum of 5-foot candles of light so all treads and landings will be visible.

7.4.2.14. Inclined Ladders. In some Air Force facilities, space limitations resulted in permanent stairways being installed which exceeded the 50-degree angle. These constructions are commonly referred to as inclined ladders. Where an inclined ladder has been installed, it will have handrails on both sides and open risers. New construction will have stairs installed within the preferred range of 30-50 degrees.

7.4.2.15. Maintenance. Stairs and ramps will be kept clean, free of obstructions or slippery substances, and in good repair at all times. Supervisors will ensure:

7.4.2.15.1. Loose boards, insecure treads, protruding nails, and torn or worn stair treads are repaired or replaced immediately.

7.4.2.15.2. Posters, bulletin boards, and other objects that could distract a person's attention are not placed in stairwells or rampways.

7.4.2.15.3. Slippery or worn treads and surfaces are either replaced or made safe by coating them with nonslip surface materials.

7.4.2.15.4. Treads and risers are of uniform size.

7.4.2.15.5. Stair nosings are securely fastened and rounded or beveled to prevent personnel from catching their heels on the treads.

7.4.2.15.6. Guardrails and handrails are smooth, free of splinters or burrs, and securely mounted.

7.4.2.15.7. Outside stairways, entrances, sidewalks, loading docks, and ramps are cleared of snow and ice and that abrasive materials, such as sand or ash, are readily available and used

during inclement weather. This also includes all emergency exits and walks leading from them.

7.5. Fixed Ladders. NOTE: OSHA 29 CFR 1910.24 was based on the 1970 edition of NFPA 101, Life Safety Code, which has been revised numerous times since 1970. OSHA has agreed that egress components such as stairs, ramps, guard rails, or hand rails that are constructed to any post-1970 edition of NFPA 101 will meet the intent of 29 CFR 1910.24 and are acceptable.

7.5.1. Hazards and Human Factors Associated with Fixed ladders. Most falls are caused by using ladders that are in poor condition and (or) unsafe acts such as running up and down, jumping, reaching too far out to the sides when working, and workers being physically unfit for this activity. These hazardous acts and conditions can be prevented by the proper selection and training of workers; supervisory enforcement of safe ladder use; and proper design, installation, and maintenance of fixed ladders and climbing devices.

7.5.2. Requirements:

7.5.2.1. Acquisition. Fixed ladders, their parts and accessories, and safety devices will be procured to meet the requirements of OSHA 29 CFR 1910.27, *Fixed Ladders*. Procurement specifications will include permanent treatment for corrosion control so future treatment will not be needed. Refer to Mil Specs for protective coating criteria.

7.5.2.2. Design and Installation. Fixed ladders are provided as a means of access to roofs, pits, silos, towers, tanks, and other limited-access areas. Fixed industrial stairs should be provided where access is daily or during each shift for gauging, inspection, regular maintenance, or when carrying tools or equipment is normally required and sufficient space is available. The installation CE selects the type of fixed ladder after determining that a stairway cannot be used. This selection will vary due to location and environmental conditions. The following paragraphs do not address the selection process but do provide general design and installation criteria for use by civil engineers and supervisors.

7.5.2.2.1. Length. Ladders 20 feet or less should be of a continuous length. When they are more than 20 feet and of continuous length, the following requirements shall be considered (OSHA 29 CFR 1910.27):

7.5.2.2.1.1. Landing Platforms. A landing platform is provided for a person to rest or gain access to another section of the ladder. Platforms will be provided every 30 feet, or fraction thereof, except that, where no cage, well, or ladder safety device is provided, landing platforms shall be provided for each 24 feet of height or fraction thereof.

7.5.2.2.1.2. The platform will not be less than 24 inches wide by 30 inches long and will be equipped with standard railings. Toeboards are required where the hazard of objects falling is present. (OSHA 29 CFR 1910.27)

7.5.2.2.1.3. Ladder Safety Devices, Cages, and Wells. Cages and wells merely contain a falling climber rather than restricting the distance of fall. Therefore, new procurement of a fixed ladder (where fall protection is required) shall include a safety climb device rather than a cage or well. All ladder safety devices such as those that incorporate positioning belts, friction brakes, and sliding attachments shall meet the design requirements of the ladders which they serve. Where a cage is installed it shall extend a minimum of 42 inches above the top of landing, unless other acceptable protection is provided. Cages shall

extend down the ladder to a point not less than 7 feet nor more than 8 feet above the base of the ladder. Specific design and construction information is contained in ANSI Standard Al4.3, *Ladders-Fixed-Safety Requirements*. Ladder safety devices, cages, or wells are required on all fixed ladders more than 24 feet.

7.5.2.3. Ladder Pitch. The preferred pitch of fixed ladders will be in the range of 75 to 90 degrees from the horizontal. Any pitch below 75 degrees is substandard and will be avoided. Ladders with a pitch in excess of 90 degrees are prohibited. (OSHA 29 CFR 1910.27)

7.5.2.4. Load Capacity. All ladders, platforms, appurtenances, and fastenings will be designed to meet the load requirements of OSHA 29 CFR 1910.27.

7.5.2.5. Lighting. Adequate illumination will be provided when ladders are used under conditions of inadequate visibility. A minimum lighting intensity of 5-foot candles is recommended. Lamps should be installed so the light does not reflect in a climber's eyes.

7.5.2.6. Access. Where unauthorized use of a fixed ladder is a problem, such as in a public area, the bottom 7 feet should be guarded. Examples of guarding include the use of a fence with locked gates and making the bottom portion portable or spring loaded and available only as needed. Additionally, there must be a warning sign to prohibit access by unauthorized persons.

7.5.2.7. Slipping. When the potential for climbers to get mud, oil, or grease on their footwear creates a slipping hazard, a mat of crushed rock, a raised platform, or a boot scraper should be provided.

7.5.2.8. Electric Lines. Electrical conductors will not be installed on or adjacent to fixed metal ladders, unless they are beyond reach and cannot be used as a handrail or grabbed in an emergency. This distance should be at least 5 feet from the ladder. If there is any potential for contact with parts of electric equipment or circuits, these parts shall be de-energized and locked out according to **Chapter 21**.

7.5.2.9. Iron Rung Ladders. Iron rung ladders shall be built into the walls of each manhole over 12 feet deep. The distance between rungs is the same as other fixed ladders. More detailed design criteria can be found in OSHA 29 CFR 1910.27 and ANSI Standard Al4.3.

7.5.2.10. Grounding and Bonding. Ladders and related equipment will be grounded and (or) bonded, to drain off accumulated static electricity when used where static electricity is hazardous to the work operation, such as fuel cell repair or refueling vehicle maintenance. Static discharge plates will also be provided.

7.5.3. Inspections:

7.5.3.1. A formal, fully documented inspection of all fixed ladders will be accomplished upon installation and at least every 3 years thereafter. These inspections will be performed by installation CE for ladders installed on real property facilities or real property installed equipment (RPIE). The using organization is responsible for ensuring inspections are done for facilities and equipment which are not real property. When qualified personnel are not available in using organizations, installation civil engineers will provide assistance. Inspection documentation will include the type ladder and safety climb device installed, location, a detailed list of all discrepancies, and corrective action status.

7.5.3.2. Climbers will be alert to potential hazards and perform informal inspections of fixed ladders prior to every use. No attempt to climb will be made until all hazardous conditions are corrected. Specific hazards to look for during inspections are: loose, worn, and damaged rungs or side rails; damaged or corroded bolts and rivet heads; damaged or corroded handrails and brackets on platforms; and deteriorated masonry where fixed ladder anchorages are secured to a structure, including loose or damaged carrier rails or cables.

7.5.4. Maintenance. When repairs are made to fixed ladders and related equipment, the following requirements shall be met:

7.5.4.1. The materials used will be at least the equivalent of the original construction.

7.5.4.2. Any modification to ladder components, safety climb device, or related equipment will be approved by installation CE, the property manager, and installation ground safety officials.

7.5.4.3. All welding will be performed by a welder experienced in the materials of the fixed ladder.

7.5.5. Selection of Personnel. There are individuals who become spatially disoriented when they are working on elevated ladders or platforms and can see the ground or floor some distance below them. This condition is known as height vertigo. Common reactions to this condition are to “freeze” and hang on to any permanent support or to experience dizziness, nausea, trembling, and (or) loss of consciousness. Supervisors will be especially vigilant in screening and observing newly hired or newly assigned personnel when it is expected that they will be required to work in elevated locations as part of their job. Workers descending into pits or shafts also may experience vertigo. Individuals who are known to experience vertigo should be disqualified as ladder users.

7.5.6. Ladder Use. Continued safe use of ladders requires proper climbing practices at all times. Supervisors shall ensure climbers are trained to:

7.5.6.1. Check ladder for defects and slippery substances.

7.5.6.2. Ensure ladder and climber’s feet are free of slippery substances.

7.5.6.3. Raise or lower needed tools and materials by handlines after attaining the work position--never carry tools or materials by hand while climbing.

7.5.6.4. Face the ladder and use both hands to grip the rungs or side rails firmly.

7.5.6.5. Wear slip-resistant shoes with heels.

7.5.6.6. Climb carefully, without haste. Never run up or down, nor slide down the ladder.

7.5.6.7. Never jump from the ladder.

7.5.6.8. Remove hand jewelry (rings) prior to climbing.

7.6. Portable Ladders:

7.6.1. Hazards and Human Factors Associated with Portable Ladders. Falls are the primary hazard associated with the use of portable ladders. Falls result from a number of unsafe acts and conditions such as:

7.6.1.1. Ladders set on unstable surfaces; ladders placed in front of doors which open towards the ladder without proper guarding; or ladders used as scaffolds. Personnel reaching too far out to the

sides; or standing too high to maintain their balance. Use of a defective ladders (i.e., broken rail or rung). Improvising and using a make-shift ladder; carrying materials in their hands while ascending or descending a ladder; descending with their back to the ladder; or using metal or wooden ladders with metal sides and reinforced or metal rungs while working on electrical circuits. These hazards are minimized if workers adhere to proper ladder discipline and if supervisors ensure equipment is inspected, maintained in good condition, and properly used.

7.6.2. Requirements:

7.6.2.1. Acquisition and Selection Considerations:

7.6.2.1.1. Portable ladders acquired for Air Force use will meet the design and construction specifications of ANSI standards identified in **Table 7.3.** Personnel needing access to these ANSI standards will contact their installation ground safety representative for guidance. EXCEPTION: Fire department ladders will be maintained and inspected according to NFPA Standards 1931, *Design of and Design Verification Tests for Fire Department Ground Ladders*, and NFPA 1932, *Use, Maintenance, and Service Testing of Fire Department Ground Ladders.*

7.6.2.1.2. There are a variety of ladder styles the supervisor can choose. The selection, to include construction material and proper size, will be based on where and how the ladder may be used. This chapter addresses step and extension ladders. These ladders are most commonly constructed from wood, metal, and fiberglass. However, the general guidance presented is applicable to most portable ladders used in the Air Force. MAJCOM, DRU, and FOA ground safety staffs will determine its applicability to special purpose ladders not adequately covered by ANSI standards.

7.6.2.1.2.1. Ladders come in four workload ratings. **Table 7.4.** gives the basic differences in these ladders. Supervisors will order TYPE IA or I ladders whenever possible. TYPE II ladders should only be considered when local purchase is required and local manufacturers cannot provide TYPE IA or I. Due to the significant workload limitations of Type III ladders, they should not be procured for industrial use.

7.6.2.1.2.2. The supervisor will consider the location as well as durability when selecting the ladder and the material from which its constructed. Aluminum ladders are normally lighter than wood while steel ladders are as heavy or heavier. Metal ladders and wood ladders with metal reinforced side rails or metal rungs shall not be used in areas where a worker or the ladder could contact exposed energized electrical circuits. Carrying steel and wood ladders is fatiguing if the worker has to carry them for a considerable distance.

7.6.2.2. Inspections. Thorough visual inspections of ladders will be made by the supervisor when the ladder is initially received and prior to being placed in service. Workers will perform a visual inspection prior to each use. Defects or damage to look for include: (OSHA 29 CFR 1910.25, *Portable Wood Ladders*)

7.6.2.2.1. Evidence the ladder was exposed to excessive heat (such as in a fire) or to corrosive substances. When ladders are so exposed, their ability to support the designed working load should be questioned. The ladder should be retested according to ANSI standards.

7.6.2.2.2. Side rails, steps, rungs, or related hardware that are cracked, split, or deformed.

7.6.2.2.3. Pulleys, cables, and ropes which bind or are frayed.

7.6.2.2.4. Rivets, connections, and spreaders for looseness or shearing.

7.6.2.2.5. Nonskid base material that is loose or missing. Metal and metal-reinforced single and extension ladders, except aircraft boarding ladders, will be equipped with safety shoes, spurs, spikes, or combinations thereof to prevent slipping.

7.6.2.2.6. Metal and metal reinforced ladders that are not marked for electrical hazards. Ladders not already marked with safety use instructions by the manufacturer shall be stenciled, "DANGER — DO NOT USE AROUND ELECTRICAL EQUIPMENT," in 2-inch high red letters or the largest letters the surface will allow (minimum letter size is 1 inch).

7.6.2.2.7. Ensure that rungs and steps designed for use in ascending or descending on metal or plastic ladders are corrugated, knurled, dimpled, or coated with skid-resistant materials.

7.6.2.2.8. Ladders with broken or missing steps, rungs or cleats, broken side rails, or other defects. Ladders with these defects will not be used.

7.6.2.3. Maintenance. Proper maintenance ensures the safe condition of the ladder. Hardware, fittings, and related equipment will be checked frequently and kept in proper working condition. All bolts and rivets will be in place and secured. Joints between steps or rungs and the side rails will be tight. (OSHA 29 CFR 1910.26, *Portable Metal Ladders*)

7.6.2.3.1. Lubricate metal bearings of locks, wheels, pulleys, etc., as required to keep them working.

7.6.2.3.2. Replace frayed or worn rope.

7.6.2.3.3. Keep safety feet and other parts in good condition to ensure they work.

7.6.2.3.4. Coat wood, metal, and fiberglass ladders with a suitable protective material when required. Do not paint wood ladders with an opaque coating, since possible defects may be covered up. If protective coatings are considered desirable for wooden ladders, use only transparent coatings or wood preservatives. Protect metal ladders that may come in contact with acids or alkali solutions with a locally approved coating. When location demands, protect metal ladders against corrosion caused by moisture or salt spray. When plastic ladder rails/surfaces have the appearance of exposed fibers or an apparent color change from weather exposure they will be washed with a mild liquid detergent solution and allowed to air dry. Spray or brush the ladder rails with acrylic lacquer, epoxy, or other locally approved coating sufficient to cover the exposed fibers. Following the first coat, lightly sand the fiberglass surface with "00" sandpaper, or equivalent, to smooth the glass bristles. (ANSI Standard A14.4, *Job-Made Wooden Ladders, Safety Requirements for*)

7.6.2.4. Remove from service ladders with defects which cannot be immediately repaired and ensure they are scheduled for repair or destruction. Use an AF Form 979, Danger Tag, to warn workers that the ladder cannot be used. If a ladder is to be discarded, remove it from the maintenance area and cut it in half to prevent further use. Do not attempt to straighten or use a bent ladder made of fiberglass.

7.6.2.4.1. Personnel Training. Personnel who use ladders at working heights of 6 feet or more will be adequately trained in the care and use of different types of ladders. The supervisor or a designated trainer will conduct this training when a worker is first assigned. (Refer to paragraph **7.5.6.**). Information presented during safety briefings will satisfy the periodic training

requirement. All training will include hands-on instruction to include inspection of ladders for defects, possible electrocution hazards, proper positioning, and placement of ladders for various job sites. Training will be documented according to instructions in AFI 91-301.

7.6.2.5. Care and Use of Ladders: (OSHA 29 CFR 1910.25 and 1910.26)

7.6.2.5.1. Requirements Applicable to All Ladders:

7.6.2.5.1.1. Inspect ladders before climbing, to ensure all parts are in good condition. To permit inspection, procure and maintain wood ladders with transparent finish only.

7.6.2.5.1.2. Handle ladders with care. Do not drop, jar, or misuse them.

7.6.2.5.1.3. Store ladders in a way that provides easy access for inspection and permits safe withdrawal for use. When possible, store ladders on racks. Ensure the racks have enough supporting points to keep the ladders from sagging. Do not place material on stored ladders. Store wood ladders in a location free from exposure to the elements and excessive heat or dampness.

7.6.2.5.1.4. Properly support ladders being transported (horizontally or vertically) on vehicles. Make sure supporting points are of a soft material, such as hardwood or rubber-covered iron pipe, to minimize the chafing and effects of road shock. Tying the ladder to each support point could reduce damage due to road shock.

7.6.2.5.1.5. Place portable ladders so the side rails have a secure footing. Ensure the top rest for portable rung and cleat ladders is reasonably rigid and has adequate strength to support the applied load. Never place a ladder on a slippery, icy, slanting, or vibrating footing unless it is securely lashed in position.

7.6.2.5.1.6. Fasten the ladder securely when the ladder can be knocked over by others who are working in the area. As an alternative, assign someone to steady the bottom or protect the area around the ladder against personnel or vehicular traffic.

7.6.2.5.1.7. Do not place ladders:

7.6.2.5.1.7.1. Over machines with exposed moving parts.

7.6.2.5.1.7.2. In front of doors which open toward the ladder unless the door is blocked open, locked, or a person is stationed at the foot of the ladder to direct pedestrian traffic.

7.6.2.5.1.7.3. On boxes, barrels, or other unstable bases to obtain additional height.

7.6.2.5.1.8. If a ladder is used on a walkway, in an aisle, or adjacent to a road, position cones or barricades to warn and direct pedestrians away from the ladder.

7.6.2.5.1.9. On jobs requiring the use of a ladder, place the ladder directly in front of or under the work. When work cannot be done without overreaching, move the ladder to the proper location or use another approved method (scaffold or work platform).

7.6.2.5.1.10. Allow only one person on a portable ladder at any time, unless designed for use by two people.

7.6.2.5.1.11. When ascending or descending a ladder, face the ladder and maintain a firm hold on the ladder.

7.6.2.5.1.12. Perform work requiring the use of both hands only on stepladders or platform ladders.

7.6.2.5.1.13. Place straight and extension-type ladders in a position to have at least 1 foot of slope for each 4 foot of ladder length. For example, a 12-foot extension ladder must be 3 feet from the supporting structure.

7.6.2.5.1.14. Use ladders of sufficient length to permit workers to reach their work when standing no higher than the third rung from the top of a straight ladder, or the second step from the top. **NOTE:** The top of a stepladder is not a step and is not counted as a step when the ladder is greater than 5 feet in length.

7.6.2.5.1.15. Ensure ladders are equipped with rubber safety feet to prevent slipping.

7.6.2.5.1.16. Do not:

7.6.2.5.1.16.1. Carry anything that will interfere with the free use of both hands when climbing a ladder. Raise material and equipment to the working position using a rope and canvas bucket or another approved method.

7.6.2.5.1.16.2. Use ladders as guys, braces, skids, horizontal platforms or scaffolds, or for other than their intended purposes.

7.6.2.5.1.16.3. Consider nonslip bases (safety feet) as a substitute for care in safely placing, lashing, or holding a ladder that is being used upon oily, metal, concrete, or slippery surfaces.

7.6.2.5.1.16.4. Stand on the top cap of trestle or combination ladders, nor the top step of stepladders (three-step aircraft ladders exempted). MAJCOM, DRU, and FOA ground safety staffs will evaluate and provide guidance for military-unique operations.

7.6.2.5.1.16.5. Place ladders on gratings unless the base can be lashed or secured to prevent slippage.

7.6.2.5.1.16.6. Leave ladders in place unattended.

7.6.2.5.1.16.7. Use portable metal or metal reinforced ladders when performing work on or near electrical equipment, but use wood or fiberglass ladders. Keep them clean. Remove all surface buildup of dirt, grease, or oils to avoid creating a ready path for electrical current. (OSHA 29 CFR 1910.333, *Electrical-Selection and Use of Work Practices*). EXCEPTION: Fiberglass ladders with metal rungs are acceptable.

7.6.2.6. Additional Requirements for Extension Ladders:

7.6.2.6.1. Where possible, portable non-self-supporting ladders will be used at such a pitch that the base of the ladder is placed a distance from the vertical wall that is one-fourth of the working length of the ladder (the length along the ladder between the foot and the top support). The ladder will be placed to prevent slipping or it will be lashed or manually held in position.

7.6.2.6.1.1. In raising the ladder, place it against the structure and extend the ladder while the bottom end is in place by either pushing or by means of a rope furnished to pull the top section in place. Before ascending the top portion of the ladder, check carefully to determine whether or not the devices locking the two sections together are thoroughly engaged. Ensure the top of the ladder extends at least 3 feet above the support structure.

7.6.2.6.1.2. In lowering the top section, after raising it slightly to disengage the locking devices, allow the ladder to descend slowly while under full control, being careful not to place fingers, hands, or feet in position to become caught between rungs of the two sections.

7.6.2.6.1.3. To support the top of the ladder at a window opening, a board will be attached across the back of the ladder, extending across the window to provide firm support against the building walls or window frames. (ANSI Standard 14.1, *Ladders-Portable Wood, Safety Requirements for*)

7.6.2.6.2. All ladders, whether straight, step, or extension type, shall be laid flat before the worker leaves the job site. Where possible, workers will secure or remove the ladder to prevent unauthorized use.

7.6.2.6.3. Short ladders will not be spliced together to provide long sections.

7.6.2.6.4. The minimum overlap for the two sections of two-section extension ladders is listed in **Table 7.5.**

7.6.2.6.5. Portable rung ladders with reinforced rails will be used only with the metal reinforcement on the underside. Ladders of this type will not be used near electrical conductors since the reinforcing itself is a good conductor.

7.6.2.6.6. A ladder will not be used to gain access to a roof unless the top of the ladder extends at least 3 feet above the point of support at eave, gutter, or roof line.

7.6.2.6.7. Adjustment of extension ladders will be made by the user only when standing at the base of the ladder, so the worker can see when the locks are properly engaged.

7.6.2.6.8. The middle and top sections of sectional or window cleaner's ladders will not be used for bottom sections unless equipped with nonslip bases (safety feet).

7.6.2.6.9. Extension ladders will always be raised so the upper section overlaps and rests on the bottom section. The upper section will always overlap on the climbing side of the extension ladder.

7.6.2.6.10. Hooks may be attached at or near the top of portable ladders to provide added stability.

7.7. Additional Requirements for Stepladders:

7.7.1. Ladders will not be used by more than one person at a time unless the ladder was specifically designed for use by two people. Ladders specially designed to support greater loads will be used in combination with ladder jacks and scaffold planks when an operation requires more than one person.

7.7.2. The bracing on the back legs of stepladders will not be used for climbing because it is designed solely for increasing stability.

7.7.3. Stepladders will be fully opened out and locked in position.

Table 7.1. Uniform Combination of Stairway Rise and Tread Dimension.

Angle Horizontal		Rise (In Inches)	Tread Run (In Inches)
30°	35’	6 ½	11
32°	08’	6 ¾	10 ¾
33°	41’	7	10 ½
35°	16’	7 ¼	10 ¼
36°	52’	7 ½	10
38°	29’	7 ¾	9 ¾
40°	08’	8	9 ½
41°	44’	8 ¼	9 ¼
43°	22’	8 ½	9
45°	00’	8 ¾	8 ¾
46°	30’	9	8 ¾
48°	16’	9 ¼	x 8 ½
49°	54’	9 ½	8 ¼

Table 7.2. Ramp Installation Dimension. (NFPA 101, Life Safety Code, Ramps, Classification).

	CLASS A	**CLASS B**
Width	44 inches (112cm)	30 inches (76 cm)
Slope 30 inches (76 cm)	1 in 10 inches	1 in 8 inches
Maximum height Slope Between landings	12 feet (3.7 m)	12 feet (3.7m)

Table 7.3. ANSI Standard on Ladders.

Number	Title
A14.1	Ladders, Portable Wood, Safety Requirements For
A14.2	Safety Requirements for Portable Metal Ladders
A14.3	Ladders – Fixed – Safety Requirements
A14.4	Job – Made Wooden Ladders, Safety Requirements
A14.5	Ladders Portable Reinforced Plastic Safety Requirements

Table 7.4. Ladders Workload Ratings.

Duty Rating	Ladder Type	Working Load (Pounds)
Extra heavy duty	IA	300
Heavy duty	I	250
Medium duty	II	225
Light duty	III	200

Table 7.5. Minimum Overlap for Two-Section Extension Ladders.

Size of Ladder (feet)	Nominal Overlap (inches)
Up to and including 32	34
Over 32, up to and including 36	46
Over 36, up to and including 48	58
Over 48, up to and including 60	70

Figure 7.1. Walking Surfaces, Guarding Floor Openings Wall Opening, Fixed Industrial Stairs, and Portable and Fixed Ladders.

F7.1. This is not an all-inclusive checklist. It simply highlights some critical items in this chapter. Other requirements exist in the chapter that are not included in the checklist. Where appropriate, MAJCOMs, DRUs, FOAs, local ground safety offices, and supervisors will add to this checklist to include command or individual shop-unique requirements or situations.

F7.1.2. Are all pieces of equipment and machinery arranged to permit an even flow of materials? (Reference **7.3.1.1.**)

F7.1.3. Are machines positioned so it will not be necessary for an operator to stand in a passageway, aisle, or exit access? (Reference **7.3.1.1.1.**)

F7.1.4. Are machines positioned to allow for easy maintenance, cleaning, and removal of scrap? (Reference **7.3.1.1.1.**)

F7.1.5. Are passageways, aisles, and exit accesses provided to permit the free movement of employees bringing to and removing material from the shop? (Reference **7.3.1.1.2.**)

F7.1.6. Are at least 18 inches provided for passageways through or between obstructions? (Reference **7.3.1.1.4.**)

F7.2.1. Are floors kept in good condition and free of defects that endanger workers or interfere with the handling of materials? (Reference **7.3.1.2.**)

F7.2.2. Are floors free of obstructions which could create a tripping hazard or hinder people leaving the area during emergencies? (Reference **7.3.1.2.**)

F7.2.3. Are floors of all shops, service rooms, halls, and storerooms kept clean and free of slippery substances? (Reference **7.3.1.2.2.**)

F7.2.4. Are drip or oil pans used whenever the possibility of spilling or dripping exists? (Reference **7.3.1.2.2.**)

F7.2.5. When floors are being cleaned or finishing compounds are being applied, are signs posted to warn workers of a slipping hazard? (Reference **7.3.1.2.5.**)

F7.2.6. Do the signs remain in place until the floors are dry? (Reference **7.3.1.2.5.**)

F7.2.7. Are these caution signs yellow with black lettering? (Reference **7.3.1.2.5.**)

F7.2.8. Are passageways, aisles, and exit accesses kept clear for easy access to emergency equipment and to enable fire fighters to reach a fire, if necessary? (Reference **7.3.1.2.7.**)

F7.2.9. Are areas adjacent to fire sprinkler control valves, fuse boxes, and electrical switch

panels clear and unobstructed? (Reference **7.3.1.2.7.**)

F7.3.1. Are signs identifying the floor load capacity permanently installed, in plain view of all workers? (Reference **7.3.1.3.**)

F7.4.1. Are drains provided when floors are subject to water, moisture, flooding, or when wet processes are used? Are drains kept clear to prevent clogging? (Reference **7.3.1.4.**)

F7.5.1. Are all aisles, passageways, and work areas adequately lighted? **(**Reference **7.3.1.5.**)

F7.6.1. Are all floor openings, such as hatchways, chutes, pits, trap doors, manholes, and ladder-ways properly guarded? (Reference **7.3.1.6.**)

F7.6.2. Are all stairways and ladderway openings guarded by a standard railing and toeboards on all open sides, except at the entrance of the opening? (Reference **7.3.1.6.1.2.**)

F7.6.3. Are all open-sided floors, platforms, and runways 4 feet or more above the ground guarded on all open sides? (Reference **7.3.1.7.3.**)

F7.6.4. Are grab handles installed on each side of the opening, when the operation requires reaching through or around the unprotected opening? (Reference **7.3.1.7.4.**)

F7.6.5. Are the general specifications for standard railings and toeboards used? Is OSHA 1910.23 consulted for specific detail on construction and installation? (Reference 7.3.1.6.7.5.)

F7.7.1. Are frequently used loading docks located away from principal streets and intersections? (Reference **7.3.2.1.**)

F7.7.2. Are the surfaces of docks smooth, even, and their edges marked or highlighted? (Reference **7.3.2.1.1.**)

F7.7.3. Are the dock widths 2 feet wider than the widest vehicle or most common materials being transported? (Reference **7.3.2.1.2.**)

F7.8.1. Is the surface of parking lots smooth, have good drainage, and free of pedestrian tripping hazards? (Reference **7.3.2.2.**)

F7.8.2. Are entrances and exits free of obstructions that block a driver's or pedestrian's view of traffic? (Reference **7.3.2.2.**)

F7.9.1. Are exterior walkways kept clear of obstacles that block the right-of-way or present slipping and tripping hazards? (Reference **7.3.2.3.**)

F7.10.1. Do workers ensure materials are not stored, left under, or piled against buildings, doors, exits, or stairways? (Reference **7.3.2.4.1.**)

F7.10.2. Are poisonous or toxic plants prohibited for landscaping unless approved by the base medical services? (Reference **7.3.2.4.2.**)

F7.10.3. Are trees and bushes adjacent to walkways trimmed to permit a clear path for pedestrians? (Reference **7.3.2.4.2.**)

F7.11.1. Is all construction work clearly identified by signs that can be read from at least 50 feet, in addition to barriers marked with reflective materials? (Reference **7.3.2.5.**)

F7.11.2. Are illuminated or other warning flashers also used for easy sighting after dark? (Reference **7.3.2.5.**)

F7.12.1. Are fixed stairs and ramps designed and built to carry a load of five times the normal live load anticipated? (Reference **7.4.2.2.**)

F7.13.1. Are fixed stairs (not part of the exit access) installed at angles to the horizontal of between 30 and 50 degrees? (Reference **7.4.2.4.**)

F7.14.1. Are ramps (not part of the exit access) installed following the guidance in **Table 7.2.**?

(Reference **7.4.2.5.**)

F7.15.1. When the doors or gates open directly onto a stairway, is the available width of the landing wider than 20 inches? (Reference **7.4.2.6.**)

F7.16.1. Where there is less than 7 feet of headroom over stairs, are obstructions padded? Where they cannot be padded, are they color coded with yellow or yellow-and-black stripes to highlight the hazard? (Reference **7.4.2.7.**)

F7.16.2. In all cases, are caution signs used to warn people of low clearance? (Reference **7.4.2.7.**)

F7.17.1. Are open grating type treads used on stairs which are not enclosed? (Reference **7.4.2.10.**)

F7.18.1. Is every flight of fixed industrial stairs, with four or more risers, equipped with standard guardrails or standard handrails? (Reference **7.4.2.12.1.**)

F7.18.2. Do stairs less than 44 inches wide, having both sides enclosed, have at least one handrail, preferably on the right side going down? (Reference **7.4.2.12.1.1.**)

F7.18.3. Do stairs less than 44 inches wide, having one side open, have at least one guardrail on the open side? (Reference **7.4.2.12.1.1.**)

F7.18.4. Do stairs less than 44 inches wide, having both sides open, have one guardrail on each side? (Reference **7.4.2.12.1.3.**)

F7.18.5. Do stairs more than 44 inches wide but less than 88 inches wide have a handrail on each enclosed side and a guardrail on each open side? (Reference **7.4.2.12.1.4.**)

F7.18.6. Do stairways 88 or more inches wide have one handrail on each enclosed side, one guardrail on each open side, and one intermediate guardrail built midway of the width? (Reference 7.4.2.12.1.1.5.)

F7.18.7. Are spiraling and winding stairs equipped with a handrail offset to stop people from walking on the parts of the treads that are less than 6 inches wide? (Reference **7.4.2.12.2.**)

F7.19.1. Are stairs and ramps lighted so all treads and landings will be visible? (Reference **7.4.2.13.**)

F7.20.1. Are stairs and ramps kept clean, free of obstructions or slippery substances, and in good repair? (Reference **7.4.2.15.**)

F7.20.2. Are slippery or worn treads and surfaces either replaced or made safe by coating them with non-slip surface materials? (Reference **7.4.2.15.3.**)

F7.20.3. Are guardrails and handrails smooth, free of splinters or burrs, and securely mounted? (Reference **7.4.2.15.6.**)

F7.21.1. Are fixed industrial stairs provided as a means of access to roofs, pits, silos, towers, tanks, and limited-access areas, where access is daily or during each shift for gauging, inspection, regular maintenance, etc.? (Reference **7.5.2.2.**)

F7.22.1. Are ladders 20 feet or less of a continuous length? (Reference **7.5.2.2.1.**)

F7.22.2. When ladders are more than 20 feet and of a continuous length, are the following requirements considered: (Reference **7.5.2.2.1.**)

F7.22.3. A landing platform is provided for a person to rest or gain access to another section of the ladder? (Reference **7.5.2.2.1.1.**)

F7.22.4. Platform is provided every 30 feet, or fraction thereof? (Reference **7.5.2.2.1.1.**)

F7.22.5. The landing platform is not less than 24 inches wide by 30 inches long and equipped with standard railings? (Reference **7.5.2.2.1.1.**)

F7.22.6. Toeboards are provided where the hazard of objects falling is present? (Reference **7.5.2.2.1.1.**)

F7.23.1. Is adequate illumination provided when ladders are used under conditions of inadequate visibility? (Reference **7.5.2.5.**)

F7.24.1. Where unauthorized use of a fixed ladder is a problem, such as in a public area, is the bottom 7 feet guarded? (Reference **7.5.2.6.**)

F7.25.1. Are electrical conductors not installed on or adjacent to fixed metal ladders, unless they are beyond reach and cannot be used as a handrail or grabbed in an emergency? Is the installation at least 5 feet from the ladder? (Reference **7.5.2.8.**)

F7.26.1. Are iron rung ladders built into the walls of each manhole over 12 feet deep? (Reference **7.5.2.9.**)

F7.27.1. Are formal, fully documented inspections of all fixed ladders accomplished upon installation and at least every 3 years thereafter? (Reference **7.5.3.1.**)

F7.28.1. Are modifications to ladder components, safety climb devices, or related equipment approved by base CE, the property manager, and ground safety officials? (Reference **7.5.4.2.**)

F7.29.1. Do supervisors ensure climbers are trained according to criteria in paragraph **7.5.6.1.** – **7.5.6.8.** (Reference **7.5.6.**)

F7.30.1. Do workers abstain from using metal ladders and wood ladders with metal reinforced side rails in areas where they could contact energized electrical circuits? (Reference **7.6.2.1.2.2.**)

F7.31.1. Do supervisors make thorough visual inspections of ladders when the ladder is initially received and before the ladder is placed in service? (Reference **7.6.2.2.**)

F7.31.2. Do workers perform an inspection of ladders prior to use? (Reference **7.6.2.2.**)

F7.31.3. Are the following defects and damage looked for:

F7.31.3.1. Side rails, steps, rungs, or related hardware that are cracked, split, or deformed? (Reference **7.6.2.2.2.**)

F7.31.3.2. Pulleys, cables, and ropes which bind or are frayed? (Reference **7.6.2.2.3.**)

F7.32.1. Are hardware, fittings, and related equipment checked frequently and kept in proper working condition? (Reference **7.6.2.3.**)

F7.32.2. Are all bolts and rivets in place and secured? (Reference **7.6.2.3.**)

F7.32.3. Are joints between steps or rungs and the side rails tight? (Reference **7.6.2.3.**)

F7.32.4. Are safety feet and other parts kept in good condition to ensure they work? (Reference

7.6.2.3.3.)

F7.32.5. Are wood, metal, and plastic ladders coated with a suitable protective material when required? (Reference **7.6.2.3.4.**)

F7.32.6. Are wood ladders not painted with an opaque coating, avoiding a cover-up of possible defects? (Reference **7.6.2.3.4.**)

F7.32.7. When location demands, are metal ladders protected against corrosion? (Reference **7.6.2.3.4.**)

F7.32.8. Are ladders with defects which cannot be immediately repaired removed from service and action taken to ensure they are scheduled for repair or destruction? (Reference **7.6.2.4.**)

F7.32.9. Are danger tags used to warn workers that the ladder cannot be used? (Reference **7.6.2.4.**)

F7.33.1. Are personnel who use ladders adequately trained by the supervisor in the care and use of different type ladders when a worker is first assigned? (Reference **7.6.2.4.**)

F7.34.1. Are ladders stored in a way that provides easy access for inspection and permits their safe withdrawal for use? (Reference **7.6.2.5.1.3.**)

F7.34.2. Are wood ladders stored in a location free from exposure to the elements and excessive heat or dampness? (Reference **7.6.2.5.1.3.**)

Chapter 8

ELECTRICAL SAFETY

8.1. Hazards. Electrical cord abuse is the most often single cause for electric shock to workers in the field. Excessive scraping, kinking, stretching, and exposure to grease and oils will damage power cables and cause premature failure and possible shock or burns. Electrical installations and equipment present the potential for shock or electrocution from contact with energized systems. Fire can be caused by short circuits, over-heated equipment, or failure of current limiters, thermal sensors, and other devices. Explosions may occur when flammable liquids, gases, or dusts are exposed to ignition sources generated by electrical equipment.

8.2. Electrical Installation and Equipment. National Fire Protection Association (NFPA) 70, *The National Electrical Code (NEC)*, Electrical Safety Requirements for Employee Workplaces and AFI 32-1064, *Electrical Safe Practices*, are the source documents for electrical installations and equipment and shall be complied with.

8.3. Receptacles. Electrical receptacles and cover plates will be free of cracks and securely mounted. Receptacles located in damp or wet locations will be protected by ground fault circuit interrupter(s) (GFCI) and meet requirements of the NEC.

8.3.1. Multiple plug adapters will not be used solely as wiring to provide additional or more convenient outlets.

8.3.2. Arc-fault Circuit Interrupters (AFCI), are now required by the NEC for bedroom receptacles after 01 Jan 2002.

8.4. Plugs. Attachment plugs will be of dead front construction. When in use, plugs will be inserted fully so no part of the prongs is exposed. The third and (or) grounding prong is a safety feature and shall be checked frequently by supervisors for security, especially on items that are unplugged frequently. The prong will not be cut off, nor will an adapter be used to allow a three-prong plug to fit a two-prong receptacle, since this negates the third wire grounding protection. This paragraph does not apply to double insulated equipment or equipment such as clocks, radios, can openers, etc., which are not normally manufactured with a grounding plug. Plugs, whether molded or clamped, shall be firmly attached to the cord to prevent pulling against wire connection points. Clamps will be nonmetallic. Also refer to paragraph **8.5.5.**

8.5. Flexible Cords and Extension Cords. Electrical cords shall not be subjected to electrical currents or voltages greater than their rated capacity.

8.5.1. Electrical extension cords will not be used as a substitute for fixed wiring. Do not run them through holes in walls, ceilings, floors, doorways, windows, or similar openings. Do not run extension cords where concealed behind walls, dropped ceilings, or floors. Do not tape, staple, or tack extension cords to building surfaces. Extension cords shall not be spliced, coiled, or placed where they may be damaged or create a hazard. Cords will not be walked on nor will equipment be allowed to run over them. If cords must be placed in travel lanes, they will be protected by molded housings or bridges. Cords will not be kinked, stretched, or bent excessively. Practices of this nature will damage internal wire strands.

8.5.2. Extension cords have been responsible for numerous fires and their use will be held to an absolute minimum. If used, they will have a single connection.

8.5.3. Equipment connected by flexible extension cords will be grounded either by a three-wire cord or by a separate ground wire (except double-insulated equipment). A grommet, stress relief device, or some means of clamping approved by the NEC will be installed where cords pass through equipment housings to prevent abrasion of the cord insulation. The means used will hold the cord firmly so there is no pull or strain put on the cords internal wiring.

8.5.4. Cords used with heating appliances, such as electric irons, will be covered with flame-proof insulating material.

8.5.5. Extension cords used with portable tools and equipment will be designed with three-prong plugs. Two-wire extension cords are prohibited. EXCEPTIONS: Double insulated tools and low amp devices, such as wall clocks, pencil sharpeners, tape recorders, etchers, lamps, etc., may be used with a two-prong plug. The minimum amperage rating of the extension cord will be at least equal to, but not less than, the amperage rating of the item being powered from the cord. Plugs and sockets will be designed according to the NEC.

8.5.6. Cords will be inspected frequently by the user for signs or fraying, cracking, wearing, or any damage that could indicate a possible short-circuiting. Cords will be of the proper size and (or) rating for equipment it services. Defective cords will be taken out of service.

8.5.7. When possible, electrical power cords used with equipment will be suspended from overhead in rigid raceways.

8.5.8. Equipment connected by an extension cord will be disconnected when not in use and at the end of the work shift.

8.5.9. When disconnecting cords, the plug will be pulled on rather than the cord, to avoid damaging connections.

8.5.10. Electrical wiring or conduits will not be used as hangers for clothing or supports of any nature.

8.6. Disconnecting Means, (Circuit Breakers and Disconnect Switches). Unless their purpose is evident circuit breakers and fuse boxes will be legibly marked to indicate their purpose. Proper identification needs to be specific. For example, the marking should not merely indicate "motor," but rather "motor, water pump"; not merely "lights," but rather "lights, front lobby." Supervisors in conjunction with Civil Engineers will plainly mark all electrical fuse, switch, and circuit-breaker boxes with correct voltage, current, wattage, or other ratings as appropriate.

8.6.1. Circuit breakers and disconnect switches shall clearly indicate whether they are in the open (off) or closed (on) position. (OSHA 29 CFR 1910.304, *Wiring Design and Protection*.)

8.6.2. Circuit breakers, disconnect switches, and fuses shall be readily accessible to each employee or authorized building management personnel. They will not be located where they will be exposed to physical damage or in the vicinity of easily ignitable material. (OSHA 29 CFR 1910.304)

8.6.3. Circuit breakers shall not be taped in the “on” position. Breakers that frequently trip are an indicator of possible electrical problems and shall be promptly reported and corrected.

8.6.4. Workers will not substitute larger fuses or breakers or use bypass wires.

8.7. Guarding of Live Parts. Electrical outlets, switches, junction boxes, etc., will have cover plates securely installed. Cover plates shall be free of cracks or other defects that could cause them to be ineffective. All unused openings (knock out plugs) in switch housings, junction boxes, etc., shall be securely covered. Rigid conduits will be securely attached to the box and flexible conduits shall be firmly secured by a clamping device where the conduit enters the box.

8.8. Equipment Grounding:

8.8.1. Frames of electrical motors, regardless of voltage, shall be grounded. All covers will be securely fastened. Motor data plates will be legible and will not be painted over.

8.8.2. Exposed noncurrent-carrying metal parts of fixed equipment that may become energized under abnormal conditions shall be grounded.

8.9. Restrictions. While working on or around live electrical equipment garments with exposed metallic fasteners will not be worn, nor will flammable articles such as celluloid cap visors be worn. Articles such as jewelry, earrings, rings, hair fasteners, bracelets, or key chains will also be removed and metal framed eyeglasses will be secured by a band or cord to prevent them from falling into energized electrical circuits.

8.10. Electrical Installations and Equipment:

8.10.1. Supervisors will ensure work areas are inspected for possible electrical hazards. Sufficient workspace shall be provided and maintained around electric equipment (30 inches) to permit safe operation and maintenance of such equipment. Only qualified operators designated in writing by the supervisor will be allowed to operate the equipment. This listing of personnel certified to operate the equipment will be maintained in the work area.

8.10.2. Wires will be covered wherever they are joined by wire nuts or other approved methods (e.g., outlets, switches, and junction boxes).

8.10.3. Parts of electrical equipment which in ordinary operation produce arcs, sparks, etc., will not be operated or used in explosive atmospheres or in close proximity to combustible materials.

8.10.4. Ground Fault Circuit Interrupters (GFCI) will be used on all 125-volt, single-phase, 15-, 20-, and 30-ampere receptacle outlets at job sites when the receptacles are not a part of the permanent wiring of the building or structure. Receptacles on a two-wire, single-phase portable or vehicle-mounted generator rated not more than 5 kilowatts (kW), where the circuit conductors of the generator are insulated from the generator frame and all other grounded surfaces, shall be permitted without GFCI protection.

8.10.4.1. GFCI protection shall be provided for all electrical receptacles (125 volt, single phase, 15 or 20 ampere) in bathrooms. GFCI protection shall be provided for those electrical receptacles (125 volt, single phase, 15 or 20 ampere) that serve countertop surfaces in kitchens (NEC).

8.10.4.2. When GFCI protection is required for large areas, the GFCI breaker should be located in the circuit panel.

8.10.4.3. Receptacles located within 6 ft of a wet bar sink are required to be GFCI protected.

8.10.4.4. Arc-fault Circuit Interrupters. Arc-fault circuit interrupters shall protect all branch circuits that supply 125-volt, single-phase, 15- and 20-ampere receptacle outlets installed in dwelling unit bedrooms after 01 January 2002 (NEC).

8.10.5. In locations requiring the use of special tools (e.g., non-sparking), only tools certified for use in those areas will be used.

8.10.6. Electrical Repairs. Qualified workers may perform repairs on equipment that has been deenergized and locked out and tagged according to guidance found in paragraph **8.10.6.1.** and **Chapter 21**. In some circumstances, shop technicians may work on low voltage control, power, and lighting circuits while energized for the purpose of testing, calibrating, troubleshooting, making minor repairs, and replacement of fuses and circuit breakers. If the voltage exceeds 300 volts, ensure a safety observer is present. Perform these tasks only when authorized by applicable Technical Orders (TO), manufacturer's guides or manuals, or other approved procedures and directives. In all other cases where repairs to energized circuits or equipment are required, the work will be accomplished by qualified electricians. Install electrical equipment according to the guidance contained in the NEC.

8.10.6.1. Ensure a means for making machines inoperative is provided before maintenance is performed or adjustments (or cleaning) are made to moving parts. Use one or more of the following means:

8.10.6.2. Unplug the power cord when equipment is connected by plug and cord;

8.10.6.3. Lock the power source, circuit breaker, or start switch in the off position when equipment is wired to a direct power source. **NOTE:** If existing equipment, circuit breakers, or power sources cannot be locked in the off position, place **danger** signs or tags on the disconnecting means warning that maintenance is in progress and the disconnecting means is not to be turned on.

8.10.6.4. Ensure the safety observer is trained in CPR and equipment shut-down procedures or who is responsible for administering immediate assistance to a technician in the event of an emergency (the safety observer may be the supervisor).

8.10.7. When equipment is replaced or if a renovation project is planned, make provisions to comply with the lockout requirements. **NOTE:** New construction plans will include provisions for complying with the lockout requirements.

8.11. Additional Electrical Equipment Requirements:

8.11.1. Close rack doors at all times except as necessary to accomplish authorized repairs.

8.11.2. Operators will open and close all equipment switches quickly and positively. Ensure contact between brushes and commutators or slip rings.

8.12. Electronic Equipment. Operators or other shop personnel will not unplug equipment with components operating on high voltage unless technical publications authorize the removal of an electronic component such as a subassembly or module.

8.12.1. Personnel will use only approved solvents for cleaning electronics equipment. Provide adequate ventilation and, when using solvents, wear approved PPE when required by the Material Safety Data Sheet (MSDS) or installation ground safety or BE officials. Use compressed air (less than 15 pounds per square inch [psi]) for cleaning electrical equipment, ensure the discharge tip is a diffuser type. Use compressed air ONLY as a last resort. Vacuuming is considered an effective cleaning method.

8.12.2. Technicians will not use lead pencils, screwdrivers, or other unapproved tools to make radio frequency energy tests on any piece of electronic equipment, as serious burns can result from this practice.

8.12.3. Personnel should not hold meters in their hand while performing measurements on energized circuits or equipment. When it is necessary to handhold meters or metering cables, use gloves or other effective PPE. The holder must stand on or be in contact with dry surfaces.

8.12.4. Workers will keep workbenches clean at all times. When voltage is applied to equipment being repaired or tested, personnel will ensure tools not essential to the test and other equipment are removed from the bench. Ground metal workbenches used for repairing and testing of electronic equipment to a low resistance ground. Use stools made of wood, fiberglass, or other nonconducting materials when working on electrical or electronic equipment. **NOTE:** For electrostatic discharge control procedures, refer to TO 00-25-234, *General Shop Practice Requirements for Repair--Electrical Equipment*.

8.12.5. Purchase rubber insulating floor matting with reference to TO 00-25-232, *Control and Use of Insulated Matting for High Voltage Applications*, TO 00-25-234, to ensure approved products are used. (also see paragraph **14.5.**) Rubber matting which has been manufactured to withstand a maximum of 3000 volts of electricity to ground is considered insulated.

8.12.6. Supervisors will establish procedures requiring all accessories, that are to be used with electronic and electrical equipment, are serviceable and safe to use. Establish procedures to eliminate or control all hazard potentials to a safe acceptable level.

8.13. Emergency Equipment (Electrical Safety Boards). Functional managers may desire to have emergency equipment available at each operating location where maintenance is performed on energized high voltage circuits. High voltage is defined as 600 volts, nominal or more. Variations in the equipment will depend on local conditions and additional items may be added as determined by the commander or functional manager. The equipment may be displayed on a board, stored in an unlocked cabinet, or made available in a portable kit. The emergency equipment will be situated in a conspicuous and prominent location at each site, well marked, and readily accessible to personnel. If an electrical safety board is used, recommend the dimensions be 4 feet by 4 feet by one-half inch. Color coding is not mandatory; however, the recommended color is a dark green background with white letters and border. In each case, the color of lettering should be conspicuous against the darker background. The location of the equipment should also afford maximum protection against chemical, mechanical, or environmental deterioration. Emergency equipment will be inspected or tested frequently for serviceability. Emergency equipment will consist of:

8.13.1. The safety operations instructions or procedures for the site.

8.13.2. Cardiopulmonary resuscitation (CPR) instructions.

8.13.3. Emergency phone numbers and building number.

8.13.4. First aid kit approved by the installation medical services. This item is required if work is remote from the nearest medical facility.

8.13.5. Nonconductive cane or hook with an insulated handle.

8.13.6. Insulated fuse pullers (where required).

8.13.7. Flashlight with nonmetallic case in operating condition (especially where emergency lights are not installed).

8.13.8. Grounding stick (shorting stick).

8.13.9. Snake bite kit (remote work sites).

8.13.10. Wool blanket or

8.13.11. Insulating blanket.

8.13.12. Portable emergency signs constructed of nonconductive materials. AF Visual Aids (AFVA) 91-303, DANGER—DO NOT ENERGIZE—PERSON WORKING ON ANTENNA; (AFVA) 91-304, DANGER—DO NOT ENERGIZE—WORK IN PROGRESS ON EQUIPMENT; (AFVA) 91-305, DANGER—INTERLOCKS DISABLED; and (AFVA) 91-306, DANGER—HIGH VOLTAGE, are available through Air Force Publications web site: **http://afpubs.hq.af.mil/.** See **Chapter 21** for information on safety signs and tags.

8.13.13. CPR face mask with disposable mouthpiece.

8.13.14. Disposable gloves, which are impervious (leakproof) to body fluids, for first aid use.

8.14. Automated External Defibrillator (AED): AED approved by the installation medical services may be required if work is remote from the nearest medical facility.

8.15. Illumination. Illumination quantities needed range from about 5-foot-candles for most hallway lighting to 100-foot-candles or more for extremely fine or detailed work. The installation BEE staff should be contacted if the level of illumination in an area is in question. Control of light is important to avoid glare and harsh shadows. Soft shadows are usually acceptable, but harsh shadows should be avoided since they may obscure hazards or interfere with visibility. Supplementary lighting or additional lighting will be provided in situations where general lighting is not sufficient.

8.16. Moisture Guarding. Weatherproof electrical systems will be installed where lampholders, fixtures, or receptacles are used in wet or damp locations, such as perishable storage areas (to include all refrigerated areas, both storage and food processing). Fixtures subject to moisture such as those located near steam equipment will be of vaporproof construction to prevent electrical shock or short circuits. (OSHA 29 CFR 1910.305, *Wiring Methods, Components, and Equipment for General Use*)

8.17. Undervoltage Protection. Machines which are not adequately safeguarded to protect the worker during undervoltage situations shall have an undervoltage protective device installed. Undervoltage situations occur when a machine automatically resumes motion after a low voltage situation or power interruption and the operator is exposed to hazardous moving parts. Installation ground safety staffs and shop supervisors will identify those machines which require this protection and assure that undervoltage protection devices are installed where needed. (OSHA 29 CFR 1910.213, *Woodworking Machinery Requirements*). Also refer to **Chapter 18**.

8.18. Control Switches. Control switches (on and off) will be accessible to workers at their normal operating positions so they will not need to reach over moving parts of the machine to activate the switch. Control switch stop functions will be identified by the printed word “STOP” and (or) the color red.

8.18.1. Positive pressure switches will not be wedged for continuous operation. The motor "start" switch shall be protected against accidental and (or) inadvertent operation. (Also refer to **Chapter 18**) Electrical controls shall not be blocked or otherwise obstructed.

8.18.2. Interlocks will not be disconnected or bypassed. Interlocks can be disconnected during maintenance or adjustments only when prescribed by applicable TOs or other prescribed instructions. During these periods, a sign or AFVA stating "DANGER — INTERLOCKS DISCONNECTED" or nearest commercially available equivalent, will be placed on the equipment or nearest available equipment. Interlocks will not be permanently circumvented by operators of such equipment where interlocks are installed for safety reasons, i.e.; an interlock that prevents a machine from operating when a protective guard or panel is removed or opened.

Figure 8.1. Electrical Safety Checklist.

F8.1. This is not an all inclusive checklist. It, like all the checklists in this standard, simply highlights some critical items in the corresponding chapters. Other requirements exist that are not included in the checklist. Where appropriate, MAJCOMs, FOAs DRUs, local safety staffs, and supervisors will add to this checklist to include command or individual location or shop-unique requirements or situations.

F8.2. Are electrical receptacles and cover plates free from cracks and secured in place? (Reference **8.3.**)

F8.3. Do receptacles located in damp or wet locations meet the requirements of the NEC and are they protected by ground fault circuit interrupters? (Reference **8.3.**)

F8.4. Is the use of multiple plug adapters not allowed in order to prevent overloading electrical circuits? (Reference **8.3.**)

F8.5. Are electrical extension cords not used as a substitute for fixed wiring? (Reference **8.5.1.**)

F8.6. Are electrical extension cords not run through holes in ceilings, walls, floors, doorways, windows, or similar openings? (Reference **8.5.1.**)

F8.7. Are electrical extension cords not taped, tacked, or stapled to building surfaces? (Reference **8.5.1.**)

F8.8. Ensure the use of electrical extension cords kept to a minimum and when used are they placed where they do not create a hazard or will be subject to damage? (Reference **8.5.1.**)

F8.9. Are cords that show signs of fraying cracking, wearing, or damage removed from service? (Reference **8.5.6.**)

F8.10. Unless the purpose is evident are circuit breakers and fuse boxes legibly marked to indicate their purpose? (Reference **8.6.**)

F8.11. Are circuit breakers, disconnect switches and fuses located so that they are not exposed to physical damage or in the vicinity of easily ignitable material? (Reference **8.6.2.**)

F8.12. Are electrical outlets, switches, and junction boxes in good condition and free of defects to, to include the covering of all unused openings, in order to guard live parts? (Reference **8.7.**)

F8.13. Do workers remove jewelry, such as rings, earrings, bracelets, and watches, and secure metal frames eyeglasses with a band or cord when they work on or near live electrical equipment? (Reference **8.9.**)

F8.14. Are only qualified operators who are designated in writing by the supervisor allowed to work on electrical installations and equipment? (Reference **8.10.1.**)

F8.15. Is emergency equipment provided at each operating location where personnel are exposed to high voltage (600 volts, nominal or more.). (Reference **8.13.**)

F8.16. Are machines guarded to protect workers during undervoltage situation so that in the event of power interruption the machine will not automatically resume operation without action by the operator? (Reference **8.16.**)

F8.17. Are equipment interlocks working properly and not disconnected or bypassed by operators where interlocks are installed for safety reasons? (Reference **8.18.2.**)

Chapter 9

JEWELRY

9.1. Finger Rings:

9.1.1. Recent mishap statistics have revealed that finger injuries associated with rings is one of the most frequent category of lost-time permanent partial injuries. The loss of portions of fingers due to the ring catching on some object is the most frequent cause. Because of the potential for serious injury, finger rings will not be worn by personnel engaged in the following activities: **NOTE:** This restriction is also extended to personnel who may be assigned to these tasks on an infrequent basis. However, this prohibition applies only to personnel actually performing the work and is not intended for administrative and support personnel assigned to or visiting these areas.

9.1.1.1. Climbing, ascending, or descending activities where personnel could fall or jump from elevated surfaces account for the majority of injuries caused by the finger ring catching on an object. Some examples include personnel working on elevated surfaces; i.e., ladders, scaffolds, platforms, roofs, high reach vehicles, or descending from large vehicles such as refuelers, wreckers, sweepers, dump trucks, and stake bed trucks. The stake bed truck has been associated with a large number of injuries caused by personnel jumping or descending from the bed of this type vehicle.

9.1.1.2. Most materials handling operations. Examples include warehousing, parts handling, operating equipment, packing and crating, and attaching and detaching equipment to tow vehicles, etc.

9.1.1.3. Any type of work where individuals are exposed to moving machinery, rotating or revolving parts, or activities that could result in their hands being caught by a moving part causing any injury (for example, machine or equipment operators or inspectors).

9.1.1.4. Any type of work or inspection where an individual is exposed to an energized electrical circuit.

9.1.2. It is not possible to list each situation or task where the wearing of rings has a high potential for injury. Supervisors will conduct a JSA to identify tasks where the wearing of finger rings should be restricted. Once tasks are identified, the supervisor will include this information as part of the initial employee safety briefing required by AFI 91-301. In some instances the supervisor may elect to determine that individuals will not wear rings while engaged in work activities in general, instead of identifying individual tasks. Refer to paragraph **1.4.** of this standard, AFI 91-301, the NSC *Accident Prevention Manual for Industrial Operations (Administration and Programs)*, and the NSC *Supervisors' Safety Manual* for guidance on performing a JSA. Contact the installation ground safety staff should further assistance be needed. WARNING: Placing tape over rings or wearing gloves on the hand with a ring does not provide protection or eliminate the requirement to remove finger rings.

9.2. Other Jewelry. Any jewelry that presents a potential for catching, snagging, pulling, and tearing should be evaluated and restricted from wear. Some types of jewelry that should be controlled under these job situations are watches, bracelets, and necklaces. Metal eyeglasses should be secured by a band or cord to prevent them from falling into energized electrical circuits. Whenever possible, these types of jewelry should be removed before entering industrial work areas.

Figure 9.1. Jewelry Safety Checklist.

F9.1. This is not an all inclusive checklist. It, like all the checklists in this standard, simply highlights some critical items in the corresponding chapters. Other requirements exist that are not included in the checklist. Where appropriate, MAJCOMs, FOAs DRUs, local safety staffs, and supervisors will add to this checklist to include command or individual location or shop-unique requirements or situations.

F9.2. Do workers remove jewelry when they perform activities that involve climbing, ascending, or descending, or where they could fall or jump from an elevated surface? (Reference **9.1.1.1.**)

F9.3. Do workers remove jewelry when performing materials handling activities? (Reference **9.1.1.2.**)

F9.4. Do workers remove jewelry when performing work that exposes them to moving machinery, rotating or revolving parts, or exposes them to energized electrical circuits? (Reference **9.1.1.3.**)

F9.5. Is any jewelry that presents a potential for snagging, catching, pulling, tearing, or loss evaluated and restricted if it presents a hazard to the worker or operation? (Reference **9.2.**)

Chapter 10

OFFICE SAFETY

10.1. General Information. Office mishaps generally occur less frequently when compared to the number of mishaps experienced in the industrial environment. However, office workers (an office worker is most often defined as a person primarily engaged in performing clerical, administrative, or professional tasks indoors in an office) do experience mishaps and the resulting injuries can be just as painful and just as severe as their industrial counterparts. An office mishap resulting in a broken bone is just as costly to treat as a similar mishap occurring in an industrial setting. Even minor office mishaps can produce injuries resulting in lost workdays. **NOTE:**The following information can be applied to any administrative work environment regardless of the location.

10.2. Hazards and Human Factors:

10.2.1. Hazards. Falls frequently occur in the office. People fall from chairs when they are sitting down, getting up, or moving about on a chair. Falls occur when people lean back and tilt their chairs, or put their feet up on the desk. Falls on the same level occur from people slipping on wet or slippery floors and tripping over equipment, cords, or litter left on the floor. Falls from elevations are caused by people standing on chairs or other office furniture, or by falls from ladders, or people slipping or tripping on stairs.

10.2.1.1. Office mishaps result when people overexert themselves trying to relocate objects that are bulky, unwieldy, and heavy to move. Some workers are struck by falling objects such as file drawers that are pulled out too far. Some injuries occur when people bump into doors, desks, cabinets, open file drawers, or get their fingers, hair, etc., caught in machinery. Other times people cut themselves when using paper or box cutters or scissors. Some workers experience cumulative trauma from duties that require them to constantly reach, stretch, twist, and bend down and straighten up. Miscellaneous mishaps include foreign substances in the eye and injury or damage from electric shocks and burns

10.2.1.2. Work performed at a Video Display Terminal (VDT) may require a worker to sit for a long period of time and involves small frequent movements of the eyes, head, arms, and fingers. To sit at a fixed posture for a long period of time can cause muscle fatigue, and can eventually lead to muscle pain and injury. VDT operators may also develop various musculoskeletal disorders such as carpal tunnel syndrome, and tendonitis. (See **Attachment 1** for a definition of musculoskeletal disorders.)

10.2.2. Human Factors. Many office mishaps are the result of workers not paying attention, hurrying, not using the proper equipment for the job at hand, and not reporting unsafe conditions. Other mishaps are the result of unauthorized movement of equipment or furniture. New employees can learn work habits by observing coworkers; therefore, poor and unsafe work habits must be eliminated. Don't assume an experienced worker is always the safest worker. Some studies suggest that familiar surroundings and length of service increase the chances of worker accidents and injuries.

10.3. Responsibilities. Sound supervision is the key to a successful office safety program. However, safety is everybody's responsibility and all workers, from top management down, should be made aware of their responsibilities in the program. The keys to mishap prevention are recognizing hazards and taking

corrective actions. If unsafe conditions are found that are outside the worker's ability and responsibility to correct, the worker will report the problem to their supervisor for correction.

10.4. Basic Office Safety Procedures:

10.4.1. Horseplay. Horseplay will not be tolerated. Rarely is serious bodily harm intended when workers "fool around," however, severe injuries and even fatalities, have resulted because of horseplay.

10.4.2. Slips, Trips, and Fall Prevention.

10.4.2.1. Keep floors clean, dry, and free of refuse. Clean up spills promptly. The use of slip-resistant floor wax is recommended. Keep aisles, exits, and doorways clear at all times. Place telephone and electrical cords where they do not pose a tripping hazard to personnel. If placement in foot-traffic areas is unavoidable, use a device that contains or covers cords and prevents tripping. Briefcases, wastebaskets, etc., will be placed under desks or against a wall and out of the way. (See **Chapter 7** for additional information on walking surfaces.)

10.4.2.2. Install anti-slip material on stair treads or other areas where it may prevent personnel from slipping. If the material becomes worn, frayed, or needs replacement, report it immediately for repair. Report all defects such as loose tiles, broken steps, torn carpeting, loose or curled mats, or inadequate lighting immediately.

10.4.2.3. Keep stairways clear at all time; do not store or throw anything on steps or in stairways. Wipe up spilled liquids immediately.

10.4.2.4. Step stools or ladders will be used when retrieving anything above shoulder level. Furniture, cardboard boxes, upturned trash bins, and office chairs are not acceptable ladder substitutes. (See **Chapter 7** when using ladders.)

10.4.2.4.1. Do not position a step stool or ladder in front of a door if the door can swing and contact the stool or ladder or individual using it. Station a guard at the door if a step stool or ladder must be placed in this type of location.

10.4.2.5. Outside Areas. Keep parking lots clean (remove debris) and arrange to have potholes filled and uneven surfaces corrected. In colder climates, ensure snow and ice removal controls are taken.

10.5. Office Ergonomics. Ergonomics attempt to adapt the job to fit the person, rather than forcing the person to fit the job. Adapting the job to better fit the worker can help reduce stress and eliminate many potential injuries and disorders associated with the overuse of muscles, bad posture, and repetitive motion.

10.5.1. Adjust and position office equipment in a manner that will contribute to good posture and minimize stress on the body.

10.5.2. To help prevent ergonomic-related problems workers should consider the following:

10.5.2.1. Periodically relax the arms by letting them hang down.

10.5.2.2. Keep the shoulders relaxed, the neck straight, and elbows in the side.

10.5.2.3. Avoid slumped sitting positions, rounded shoulders, sway back, or an overly straight, stiff position.

10.5.2.4. Adjust chair height so that feet rest flat on the floor and knees are at the same height the hips. Adjust the chair properly to where a keyboard is at a comfortable height.

10.5.2.5. Sit close to the work station and do not bend over it.

10.5.2.6. Keep commonly used items located within arm's reach.

10.5.2.7. Use a shoulder rest on the telephone receiver or headset to prevent an awkward neck position and switch sides periodically.

10.5.2.8. If circumstances indicate problems may exist due to ergonomically related illnesses or injuries, the functional manager or supervisor will contact the installation Director of Base Medical Services (DBMS) to arrange for an office work station survey.

10.6. Lifting Requirements. When it is necessary for personnel to lift heavy objects, such as files, books, paper, etc., the procedures addressed in **Chapter 4** will be used.

10.7. General Office Equipment:

10.7.1. Return paper cutter blades to the fully-down and locked position when not in use. When using a paper cutter, keep fingers away from the knife. Immediately repair loose guards or springs.

10.7.2. Use the proper tool for the job at hand--locate a screwdriver rather than attempt to turn a screw with a pair of scissors or a knife.

10.7.3. Do not store heavy objects on the tops or edges of tall cabinets, bookshelves, or desks where they may fall.

10.7.4. Chairs:

10.7.4.1. Inspect chairs regularly for broken casters or other defects.

10.7.4.2. Do not stand on any chair.

10.7.4.3. When seated in a chair, do not tilt back or lean sideways or reach to the rear to lift objects.

10.7.5. File Cabinets:

10.7.5.1. Store heavy material in the bottom drawers and load cabinets from the bottom up.

10.7.5.2. To prevent bumping and tripping, return drawers to the closed position when not in use.

10.7.5.3. To avoid tipping the cabinet over, never open more than one drawer at a time. **NOTE:** Most new file cabinets have a locking feature to prevent more than one drawer from being opened at a time.

10.7.5.4. Do not open a higher file drawer if someone else is close by or kneeling at a lower drawer. Others working in the area may turn around or straighten up quickly and bump into or trip over an open drawer.

10.7.5.5. Do NOT climb on open file drawers.

10.7.6. Bookcases. Store the heaviest books on lower-level shelves.

10.7.7. Electrical Equipment:

10.7.7.1. Report or repair frayed electrical cords, loose or broken electrical wires, broken outlet covers and receptacles, and worn or broken electrical plugs.

10.7.7.2. To avoid electric shock make sure electrical equipment is properly grounded.

10.7.7.3. Do not place liquids on or around electrical equipment (such as computers, radios, copiers, or printers).

10.7.7.4. Do not block access to electrical panel doors.

10.7.7.5. Keep electrical panel doors closed, to prevent "electrical flashover" in the event of an electrical malfunction.

10.7.7.6. Installation of electrical equipment should be done by qualified workers using approved materials. All electrical installations will be done per the requirements in National Fire Protection Association (NFPA) 70, *National Electrical Code*. See **Chapter 8** for additional information.

10.7.8. Other Office Machines:

10.7.8.1. Ensure electrical power cords and installation wiring meet the requirements outlined in **Chapter 8**.

10.7.8.2. Workers will not wear jewelry, loose sleeves, neckties, and hair styles that can become caught in moving machinery (copiers, shredders, etc.). See **Chapter 9**.

10.7.8.3. Machines with exposed moving parts will be appropriately guarded.

10.7.8.4. Only properly trained workers will operate machinery.

10.7.8.5. Consider installing sound absorbent covers when utilizing noisy machines.

10.7.8.6. Office machinery will not be positioned where it can slip off the edge of a table or desk. Machinery that "creeps," will be secured or placed on a nonslip pad.

10.7.8.7. Office fans will be guarded, front and back, to prevent contact with the blades.

10.8. Working with Video Display Terminals (VDT) (see definition, **Attachment 1**).

10.8.1. Excessive fatigue, eye strain and irritation, blurred vision, headaches, stress, and neck, back, arm, and muscle pain has been associated with VDT use. Research relates these symptoms from problems with the equipment, work stations, office environment or job design, or a combination of these. Report these symptoms to your supervisor, who will contact the installation Bioenvironmental Engineering Services (BE) personnel for assistance. Suggestions to alleviate some of the symptoms associated with VDT use follow:

10.8.1.1. When working at a VDT for a long period of time, take a rest break, after each hour to reduce eye fatigue (eyestrain). Changing focus by glancing across the room or out the window from time to time to look at an object at least 20 feet away can give eye muscles a chance to relax.

10.8.1.2. Arrange workstations in a manner to eliminate glare. Lighting should be adequate for the operator to see the text and the screen, but not so bright as to cause glare or discomfort. There are four basic lighting factors that must be controlled to provide suitable office illumination and avoid eyestrain: quantity, contrast, and direct and reflected glare. Normally it is suggested a VDT should be placed at a 90 degree angle to a light source. Contact the installation BE for lighting

assistance. (Also see OSHA 3092, *Working Safely with Video Display Terminals*, for lighting and workstation design suggestions. A VDT Checklist is included in the referenced document). Glare can be avoided by:

10.8.1.3. Installing blinds, louvers, or awnings over windows;

10.8.1.4. Turning the VDT at a right angle to a window;

10.8.1.5. Eliminating all reflective surfaces near the VDT;

10.8.1.6. Installing glare screens on monitors. or

10.8.1.7. Using smaller task lights instead of overhead lighting.

10.8.1.8. An eye vision examination may provide solutions to eliminate certain types of eye and neck strain.

10.8.1.9. Modifications to make a computer workstation more comfortable for workers might include:

10.8.1.10. Use of monitor stands where the employee can position the monitor at the correct height for comfortable viewing.

10.8.1.11. Use of a copyholder where the employee can position hardcopy at the same distance and plane from the eyes as the monitor.

10.8.1.12. Adjust chair or table height in an effort to achieve the correct height in relation to the keyboard.

10.8.1.13. Use of an articulating keyboard arm where the employee can adjust the keyboard at the correct height for keying.

10.8.1.14. Use of a wrist or forearm rest can help minimize wrist extension and stress.

10.8.1.15. Use of a lumbar pillow, if the chair does not support the back properly.

10.8.1.16. Use of a footrest can provide support for the legs if they are not fully supported on the floor.

10.8.1.17. If possible, design jobs so the worker can vary VDT tasks with non-VDT tasks.

10.8.1.18. Pregnant women will consult a physician when using a VDT during pregnancy. Also consult the installation BE.

10.8.1.19. Workers who experience any of the symptoms of a musculoskeletal disorder (see definition, **Attachment 1**), should report them to their supervisor as soon as possible.

10.9. Elevators:

10.9.1. Elevator cars will stop level with the floor when the doors open to prevent a tripping hazard. Report any elevator malfunctions for immediate repair.

10.9.2. Employees should not attempt to stop automatic elevators by placing a hand between closing doors.

10.9.3. Employees will not use elevators during emergency evacuation.

10.9.4. Elevators will be inspected annual by a certified inspector. Elevator certification will be posted in the cab of the elevator in view of all passengers.

10.10. Storage:

10.10.1. Use a suitable ladder or platform to reach an object stored over-head.

10.10.2. Store materials in an orderly fashion. Train workers to stack materials in stable order to prevent them from collapsing or falling. Put the heaviest and largest items on the bottom of the stack.

10.10.3. Items that could present hazard such as scissors, knives or razors should not be left unprotected in desk drawers or storage cabinets.

10.10.4. Storing flammable and combustible substances:

10.10.4.1. Storage of flammable and combustible liquids shall be prohibited in office occupancies except that which is required for maintenance and operation of building and operation of equipment. Such storage will be in approved closed metal containers stored in a storage cabinet or in safety cans or in an inside storage room not having a door that opens into that portion of the building used by personnel. (References NFPA 30, *Flammable and Combustible Liquids*.)

10.10.4.2. Rags or cloth containing flammable or combustible liquid residue will be kept in a metal container with a self-closing cover.

10.10.4.3. Follow appropriate precautions when handling flammable or caustic liquids to prevent injury to the eyes or skin. Appropriate PPE will be available and used.

10.11. Lighting. Consult your local installation BE staff whenever specific guidance on lighting are required. All fluorescent light bulbs should be treated as hazardous waste, and must be protected from damage or release of contents.

10.12. Facility managers: will ensure office ventilation systems are regularly inspected, filters changed, and the system updated if problems occur. Do not cover air vents or obstruct air flow from registers. Do not place furniture, equipment, or materials in locations that will interfere with air movement or around thermostats.

10.13. Pest Control. Facility managers will report any observed pest control problems. Pest control chemicals will be applied by the appropriate trained personnel (CE Entomology).

10.14. Noise:

10.14.1. Noise is usually associated with industrial work areas; but noise in an office area or surrounding noise (i.e., a flightline office area) can present a problem. Contact the installation BE staff for assistance if hazardous noise is suspected.

10.14.2. Noise levels can be reduced by using the following:

10.14.2.1. To reduce equipment noise--isolate noisy machines from the general work areas or equip them with sound-reducing (absorbing) covers. Keep telephone ringers on low, purchase quieter equipment (e.g., laser printers versus impact printers).

10.14.2.2. To reduce overall noise levels--use carpeting and draperies; divide work spaces with sound-deadening partitions; and place filing cabinets and bookcases where they will block unnecessary noise.

10.15. Temperature. Temperatures of 72 to 75 degrees F should ensure a comfortable office environment. Whenever possible, workers should be positioned away from heating and air conditioning vents to avoid direct flow of hot or cold air.

10.16. Personal Protective Equipment (PPE). If chemicals are used consult the Material Safety Data Sheet (MSDS) for any material that may be hazardous to workers, and to ensure the proper PPE is utilized. If required, ensure all employees who utilize the material are provided PPE and know how and when to use it and how to properly maintain it.

10.17. Training: Provide new workers appropriate training as required in AFI 91-301. Provide appropriate training for all employees whenever surroundings are changed, new equipment is obtained, or tasks are altered.

Figure 10.1. Office Safety Checklist.

F10.1. This is not an all inclusive checklist. It, like all the checklists in this standard, simply highlights some critical items in the corresponding chapters. Other requirements exist that are not included in the checklist. Where appropriate, MAJCOMs, FOAs DRUs, local safety staffs, and supervisors will add to this checklist to include command or individual location or shop-unique requirements or situations.

F10.1.1. Are all floor areas kept clean, and free of refuse. Are spills of any type promptly cleaned-up? (Reference **10.4.2.1.**)

F10.2. Are telephone and electrical cords place where they do not pose a tripping hazard to personnel? (Reference **10.4.2.1.**)

F10.3. Are all defects floor tiles, broken steps, torn carpet or curled mats repaired or replaced immediately? (Reference **10.4.2.2.**)

F10.4. Are step stools or ladders used to retrieve or store anything above shoulder level? Furniture, cardboard boxes, upturned trash bins, and office chairs are not acceptable ladder substitutes. (Reference **10.4.2.4.1.**)

F10.5. Are office ergonomics considered when attempting to adapt the job to fit the person, rather than forcing the person to fit the job. (Reference **10.5.**)

F10.6. When lifting heavy objects or awkward objects is team lifting considered? (Reference **10.6.**)

F10.7. Are heavy objects stored on top of tall cabinets, bookshelves or desks, where they may fall on personnel? (Reference **10.7.3.**)

F10.8. Are chairs used in place of ladders or step stools? (Reference **10.7.4.2.**)

F10.9. Are heavy materials stored in the bottom of file cabinets, instead of placing the objects in the top drawers, thus making the cabinet top heavy? (Reference **10.7.5.1.**)

F10.10. Are frayed electrical cords, broken electrical wires and outlet covers reported or repaired immediately? (Reference **10.7.7.1.**)

F10.11. Is access to electrical panel clear and unobstructed? (Reference **10.7.7.4.**)

F10.12. Are employees informed that objects like jewelry, loose sleeves, neckties are hair may become caught in moving machinery likes copiers, shredders, etc.? (Reference **10.7.8.2.**)

F10.13. Are only flammable and combustibles liquids used for maintenance and operation of building and operations of equipment stored within office occupancies? (Reference **10.10.4.1.**)

Chapter 11

ADVERSE WEATHER

11.1. Responsibilities:

11.1.1. The base weather station (BWS) is responsible for making the initial notification to predetermined support agencies of adverse weather conditions. **NOTE:** Adverse weather conditions include: strong surface winds, heavy rain, freezing precipitation and thunderstorms (i.e., frequent dangerous lightning, and damaging winds, heavy rain and hail).

11.1.2. Each Air Force installation will develop a local procedure to ensure that key personnel and agencies involved in high weather risk activities and operations are notified according to the installation weather support plan. Normally, these agencies are those having aircraft, petroleum/oil/lubricant (POL) facilities, open air work and recreational activities, explosive loading, aircraft maintenance and underground utilities work. Key personnel, in turn, will advise all on-duty supervisors to take proper precautions and timely actions.

11.1.3. Each installation will employ a lightning safety program with a two-tiered notification system to minimize personnel exposure to lightning hazards. (reference **11.2.3.**)

11.2. General Lightning Safety for all AF Activities and operations:

11.2.1. When lightning is detected or observed within the immediate vicinity of any activity or operation the following precautions should be taken:

11.2.1.1. Do not go out of doors or remain out unless it is absolutely necessary. Seek shelter as follows:

11.2.1.1.1. Dwellings or other buildings that are protected against lightning;

11.2.1.1.2. Protected underground shelters;

11.2.1.1.3. Large metal framed buildings;

11.2.1.1.4. Enclosed, automobiles, buses, aircraft, and other vehicles with metal tops and bodies;

11.2.1.1.5. Streets that may be shielded by nearby buildings.

11.2.2. Certain locations are extremely hazardous during thunderstorms and should be avoided:

11.2.2.1. Hilltops and ridges;

11.2.2.2. Areas on top of buildings;

11.2.2.3. Open fields, athletic fields, golf courses;

11.2.2.4. Parking lots, tennis courts;

11.2.2.5. Swimming pools, lakes, and seashores;

11.2.2.6. Near wire fences, telephone poles, clotheslines, overhead wires, and railroad tracks;

11.2.2.7. Under isolated trees;

11.2.2.8. Near electrical appliances, telephones, plumbing fixtures, and metal or electrically conductive objects;

11.2.2.9. Aircraft dry bays, tanks, and wheel wells.

11.2.3. The two-tier notification system referenced in paragraph **11.1.2.** is as follows:

11.2.3.1. A Lightning Watch is in effect 30 minutes prior to thunderstorms being within 5 nautical mile (nm) radius of any predetermined location or activity as forecast by the BWS. **NOTE:** Lightning is a direct product of a thunderstorm. During a Lightning Watch accomplish the following:

11.2.3.1.1. Operations or activities may continue; however, all personnel must be prepared to implement Lightning Warning procedures without delay.

11.2.3.1.2. Be alert for any lightning activity, to include audible thunder, and advise supervisory personnel of any observations.

11.2.3.2. A Lightning Warning is in effect whenever any lightning is occurring within 5 nm radius of the predetermined locations and activities. Personnel in affected locations or engaged in affected activities will take the following actions:

11.2.3.2.1. Cease all outside activity and seek shelter. Recommended locations that provide safe shelter and locations to avoid are listed in paragraphs **11.2.1.** and **11.2.2.**

11.2.4. If lightning does not occur within a 5 nm radius at the valid (forecast) time of the Lightning Watch, BWS will reassess the Lightning Watch and amend as needed. Lightning warnings will be canceled when the thunderstorms have passed beyond the 5 nm radius of the location or activity. A Lightning Watch will not be canceled if there is potential for more thunderstorms within 30 min.

11.2.5. All aircraft fuel service maintenance activities (including liquid oxygen (LOX) servicing) will cease whenever a Lightning Warning is in effect. Automatic service stations which have the newer fuel dispensing system (FMU 2550) will not have to be placed in the manual mode during a Lighting Warning. The older fuel dispensing system (FMU 2000) will continue to be placed in the manual mode during a Lighting Warning. EXCEPTIONS: Commercial and Department of Defense (DoD) pipeline receipts, issues from military service stations or installation exchange (BX) service station, vehicle movements (including refuelers), and pipeline transfers (including bulk storage).

Figure 11.1. Adverse Weather Safety Checklist.

F11.1. This is not an all inclusive checklist. It, like all the checklists in this standard, simply highlights some critical items in the corresponding chapters. Other requirements exist that are not included in the checklist. Where appropriate, MAJCOMs, FOAs DRUs, local safety staffs, and supervisors will add to this checklist to include command or individual location or shop-unique requirements or situations.

F11.2. Does the base weather station make initial notification to predetermined support agencies in the event of, or forecast of adverse weather conditions. (Reference **11.1.1.**)

F11.3. Does each installation have in place a local procedure to ensure that personnel and agencies involved in high weather risk activities (aircraft operations, POL operations, open air work, underground utility work, and outdoor recreational activities) are notified and adverse weather precautions are taken in a timely manner? (Reference **11.1.2.**)

F11.4. When lightning is detected or observed are actions taken to minimize personnel exposure to lightning hazards? (Reference **11.2.1.**)

F11.5. When lightning is detected or observed in the immediate vicinity do personnel seek shelter in buildings protected against lightning, protected underground shelters, large metal framed buildings, enclosed automobiles, buses, aircraft, or other completely enclosed metal vehicles? (Reference **11.2.1.1.** – **11.2.1.1.5.**)

F11.6. Is a two-tier notification system established to minimize personnel exposure to lightning. (Reference **11.2.3.**)

F11.7. Is a lightning watch initiated 30 minutes prior to thunderstorms being within a 5 nautical mile radius of any predetermined location or activity as forecast by the base weather service? (Reference **11.2.3.1.**)

F11.8. Is a lightning warning in effect whenever any lightning occurs within a 5 nautical mile radius of any predetermined location or activity as forecast by the base weather service? (Reference **11.2.3.2.**)

F11.9. Do all outside activities cease and personnel seek adequate shelter during a lightning warning? (Reference **11.2.3.2.1.**)

Chapter 12

HAND TOOL AND PORTABLE POWER TOOLS

12.1. Hazards and Human Factors:

12.1.1. Select hand tools on the basis of safety, that tools are of good quality, and they're designed for the job at hand. Further, all tools will be kept in good repair and maintained only by qualified personnel.

12.1.2. Mishaps involving hand tools usually result from misuse. Hand tools are precision tools capable of performing many jobs when used properly. Prevention of mishaps involving hand tools on the job site becomes a matter of good instruction, adequate training, and proper use.

12.1.3. Portable power tools receive power from electricity, air pressure, explosive charges, or a rotating flexible cable. While the portable tool increases mobility and convenience, it is frequently more hazardous to use than its stationary counterpart. The reason for this is that portable tools are, of necessity, small, making safety guarding more difficult. Typical injuries resulting from the use of portable power tools include electrical shock, burns, cuts, eye injuries from flying particles, and muscle strains. Because electric powered hand tools are portable, the operator may allow the power cable to run below the material being worked or sawed and cut the cord.

12.1.4. Use of the wrong tool for the task and failure to inspect and remove defective tools from service can cause injuries.

12.2. Tool Procurement:

12.2.1. Specific criteria unique to a certain tool should be contained in the technical data requiring the use of the tool. To obtain required tools and equipment TO 32-1-2, *Use of Hand Tools*, will be consulted. General Services Administration (GSA) catalogs should also be used to determine additional requirements necessary to accomplish a particular maintenance mission. (Contact your Wing Safety office for guidance when purchasing equipment items).

12.2.2. Portable powered tools will be procured to conform to military specifications (Mil Spec), if available. If Mil Specs applicable to a portable powered tool have not been published, the procuring document shall include a requirement for the tool to meet or exceed the requirements established by OSHA 29 CFR 1910.243, *Guarding of Portable Powered Tools*, and OSHA 29 CFR 1910.304, *Wiring Design and Protection*. Whenever possible, low noise power tools or tools with noise reduction attachments should be utilized. (AFOSH Standard 48-19, *Hazardous Noise Program*, will be referenced and the BEE will be consulted.)

12.3. General Requirements:

12.3.1. Racks, shelves, or tool boxes will be provided for storing tools that are not in use. Workers will not keep tools in pants or coat pockets. A power hand tool that is running will not be left unattended.

12.3.2. Normally, hand tools will be properly used so the working force is away from a person's body in case the tool slips.

12.3.3. Hand tool safety requires the tools be of good quality and adequate for the job.

12.3.4. When workers use hand tools while they are working on ladders, scaffolds, platforms, or work stands, they will use carrying bags or tool belts for tools that are not in use. Workers will not drop tools from elevated surfaces, nor will workers throw tools to each other.

12.3.5. Supervisors will frequently inspect all hand tools used in the operations under their supervision. Defective tools will be immediately removed from service. Common tool defects are:

12.3.5.1. Handles. When handles of hammers, axes, picks, or sledges become cracked, split, broken, or splintered, they will be immediately replaced. Tool handles will be well fitted and securely fastened by wedges or other acceptable means. Wedges, always used in pairs, will be driven into the handle when repairing a sledge hammer or maul, to prevent the head from accidentally flying off if the handle shrinks. Fiberglass handles will not be etched.

12.3.5.2. Tangs. Files, wood chisels, and other tools with tangs will be fitted and used with suitable handles covering the end of the tang. Ends of the handles will not be used for pounding or tapping.

12.3.5.3. Mushroom Heads. Cold chisels, punches, hammers, drift pins, and other similar tools have a tendency to mushroom from repeated soundings. They will be dressed down or replaced when they begin to crack and curl.

12.3.6. When dressing tools, a slight bevel of about three-sixteenths of an inch will be ground around the head. This will help prevent the heads from mushrooming.

12.4. Nonpowered Hand Tools. Information on the proper usage of specific tools follows:

12.4.1. Screwdrivers:

12.4.1.1. Standard, straight blade screwdrivers will be maintained with their working edges square and free from chipped areas. If it is not possible to regrind a working edge, the screwdriver will be replaced. Screwdrivers with cracked or loose handles should be turned in for repair or replacement. Screwdrivers are not to be used as a prying tool, punch, wedge, chisel, pinch bar, nail puller, or be struck with a hammer. Workers will ensure they select a screwdriver tip that matches the screw slot. Standard type screwdrivers will not be used on Phillips or cross-head type screw slots. Phillips or crosscut screwdrivers will be used in the correct size relative to the fastener. If the tips of any screwdriver or special fastener are worn or misshaped they will be turned in for a replacement issue.

12.4.1.2. Small objects will not be held by hand, under the arm, or on the lap when being worked on with a screwdriver. Small work will be secured to a flat surface or held in a vise.

12.4.1.3. Workers will ensure they are well braced before applying force to a screwdriver. Firm footing is particularly necessary when using a screwdriver on a ladder or stand where loss of balance could result in a fall.

12.4.2. Chisels. Chisels will be kept sharp with the edge ground true. Cold chisels and punches with mushroom heads will not be used. A chisel or punch holding device will be used when working space permits. The angle of cut will be away from the body. Goggles will be worn when using a chisel, punch, a tapered or straight file, or an alignment drift.

12.4.3. Wrenches. Damaged, bent or broken wrenches, or wrenches with sprung jaws will not be used. Wrenches should not be struck with a hammer unless the wrench is designed for this purpose.

Worn box wrenches or sockets will be exchanged for new tools. When excessive pressure is required to free a nut or cap-screw, the pressure should be applied away from the face and body. Care should be taken to avoid being in a position where the hand will strike any part of the object should the wrench slip or the “fastener break."

12.4.3.1. Workers using open-end wrenches will:

12.4.3.1.1. Ensure the wrench fits the nut or bolt head.

12.4.3.1.2. Ensure when attempting to loosen a tight nut or tighten a loose nut, that the wrench seats squarely on the sides of the nut.

12.4.3.1.3. Always PULL on a wrench—not push on it. There may be situations in which pushing is the only way you can work the wrench. In these situations use the base of the palm to push keeping an open hand. On adjustable wrenches always place the wrench on the nut so the pulling force is applied to the stationary jaw side of the handle.

12.4.3.1.4. Where possible, use box wrenches for torque and less chance of slipping off the nut or bolt.

12.4.3.2. Pipe wrenches will have sharp jaws to prevent slippage. Using too small a wrench will cause the jaws to crack or break.

12.4.4. Hammers. Hammers vary in hardness and are designed for specific uses. A hammer of suitable size and weight for the task will be used. Hammers with loose or damaged handles will not be used. A hammer will be discarded if it shows dents, cracks, chips, mushrooming, or excessive wear. Redressing is not recommended.

12.4.4.1. Workers will Strike a hammer blow squarely, with the hammer's striking face parallel with the surface being struck. The sides of hammer heads are not case hardened and will never be used for pounding.

12.4.4.2. Using specific hammers:

12.4.4.2.1. Common nail hammers. If a nail cannot be withdrawn from an object after full rotation of the hammer, then a piece of wood will be placed under the hammer head and the remainder of the nail will be withdrawn. This increases the leverage and reduces strain on the handle.

12.4.4.2.2. Hardened hammers. Hammers with highly-tempered steel heads will not be used on hard steel objects.

12.4.4.2.3. Ball peen hammers. Ball peen hammers of proper size and weight will be used for striking cold chisels and punches, and straightening unhardened metal.

12.4.4.2.4. Consult manufacturers for designs and uses, to include safety procedures, when making a determination for hammers used in specific applications such as bricklaying, riveting, scaling, chipping, or work where nonferrous materials are required. Also see paragraph **12.2.2.**

12.4.5. Saws:

12.4.5.1. General Information:

12.4.5.1.1. Use the proper saw for the task. Cross-cut saws will be used for cutting (wood or lumber) across the grain, ripsaws for cutting with the grain and hacksaws will be used when cutting metal.

12.4.5.2. Hand Saws.

12.4.5.2.1. Hand saws should be selected for the specific job. Saws with broken teeth or broken or cracked handles will not be used. Saw teeth should be kept sharp and well set to prevent binding. If a saw binds while cutting, the worker will not attempt to force it through the stock.

12.4.5.2.2. If the saw sticks in damp or gummy wood, a small amount of oil or paraffin applied to the blade will make it cut smoothly. Wedges may be used to hold the cut open if oil or paraffin does not prevent the saw from sticking.

12.4.5.2.3. Nails will not be sawed. Saws will not be dropped. Saws with dull teeth can usually be sharpened and returned to use, but if the saw cannot be restored, replace it.

12.4.5.2.4. When not in use, saws should be wiped off with an oil moistened rag and kept in racks or hung by the handle to prevent damage to the teeth.

12.4.5.3. Hack Saws. A hack saw should be adjusted in the frame to prevent buckling and breaking, but should never be tight enough to break off the pin that supports the blade. The blade will be installed with the teeth pointing forward. Pressure should be applied on the forward stroke only. If the blade is twisted or too much pressure is applied, the blade may break causing injury to the user.

12.4.6. Pliers, Hand Snips, and Cutters. Pliers are designed for gripping and cutting operations and will not be used as a substitution for a wrench or any purpose for not which intended. Hand snips are designed for cutting sheet-metal. Hand snips will not be hammered on to make a cut. Cutters are designed for use on wire, rods or bolts and will not be used to pull nails, or as a pry bar.

12.4.7. Knives. Pocket knives, hook-bill knives, exacto knives or other similar extremely sharp knives will be carried in a holder or sheath. The blade of a hook-bill knife will be covered when not in use. Retractable cutters (razor) will have the blade retracted into its handle when carried or not in use. Workers will always cut away from the body. Hacking motions will never be applied when cutting.

12.4.8. Crowbars and Wrecking Bars. Crowbars and wrecking bars of sufficient size and weight will be chosen to do the job safely and easily. Makeshift bars, such as pipes or other metal objects, will never be used in place of crowbars and wrecking bars. Crowbars should have a point or toe to grip the object to be moved and a heel to act as a pivot or fulcrum. In some cases, a block of wood under the heel will prevent the crowbar from slipping and injuring the user or fellow workers. Damaged crowbars will not be used.

12.4.8.1. Case-hardened steel tools will never be used to strike crow bars or wrecking bars. Only plastic, wood, or soft metal objects will be used to hammer on pry-type bars.

12.4.9. Files. The right kind of file for the job will be selected. Files should never be cleaned by being struck against a vise or other metal object, because they chip and break easily. They will not be used as a pry bar. Broken files should be discarded and not made into center punch, chisel, or other type of tool since the hardened steel may fracture in use. Always use a wooden or plastic handle with a file.

12.4.10. Shovels, Rakes, Ice Chippers, and Sod Lifters. None of these tools will be used as prying tools. If the handle has been cracked or broken, the tool will be discarded and replaced. These tools

will be properly stored when not in use. When shovels, rakes, hoes, and similar tools are not in use at the job site, they will be positioned where the working surface cannot be stepped on.

12.4.11. Chains. Chains, when used on a job, will be the right size. Using too small a chain will cause the links to stretch and lose strength. The chain will be inspected before and after each use. The chain should not be held in the hand when pressure is applied, nor should an employee stand closer than one-half the length of the chain when the chain is under tension.

12.5. Powered Portable Hand Tools. Portable power tools increase mobility and convenience but are frequently more hazardous to use than their stationary counterparts. Personnel who are required to use portable power tools in their work will be thoroughly trained in safe operating practices. Safe operating procedures will be set up for each type of tool (consistent with this standard and the manufacturer's instructions). Supervisors and organizations that issue power tools/equipment for self-help projects must ensue workers are properly training on the equipment use and training is documented.

12.5.1. General:

12.5.1.1. Cords, Hoses, and Cables:

12.5.1.1.1. Care will be taken to prevent cords, hoses, and cables, which supply power to portable tools, from becoming tripping hazards on the job site.

12.5.1.1.2. Only rubber-sheathed cords approved by Underwriters Laboratory (UL) that meet the requirement of the National Electrical Code (NEC) will be used on portable electric tools and extension lamps.

12.5.1.1.3. All power cables for this application will be the type that includes a ground wire in addition to the power wires.

12.5.1.1.4. Tools will never be raised or lowered by electrical power cords or cables. This includes the air hose for air powered tools.

12.5.1.1.5. Special type cords (rubber covered or plastic) will be used in areas where oils or solvents may be encountered.

12.5.1.1.6. Heavy-duty plugs, clamped securely to the cords, will be used on all power tools. Workers will not attempt to unplug power cords by jerking them from their connections by the cord. Personnel using electric power hand tools will be aware of the location of the power supply cord at all times.

12.5.1.2. Switches and Controls:

12.5.1.2.1. To ensure greater operator safety, the power tools listed below will be equipped with a constant-pressure switch or control that will shut off the power when the pressure is released. Portable power tool switches will be protected against accidental operation. (OSHA 29 CFR 1910.243, *Guarding of Portable Powered Tools*)

12.5.1.2.1.1. Hand-held powered circular saws having a blade diameter greater than 2 inches.

12.5.1.2.1.2. Electric, pneumatic, or hydraulic chain saws.

12.5.1.2.1.3. All hand-held gasoline-powered chain saws shall be equipped with a constant pressure throttle control that will shut off the power to the saw chain when the pressure is released.

12.5.1.2.1.4. Percussion tools without positive accessory holding means shall be equipped with a constant pressure switch or control that will shut off the power when the pressure is released.

12.5.1.2.2. The portable hand-held power tools listed below will be equipped with a constant-pressure switch or control and may have a lock-on control, provided turn-off can be accomplished by a single motion of the same finger (or fingers) that turns it on:

12.5.1.2.2.1. Drills.

12.5.1.2.2.2. Tapers.

12.5.1.2.2.3. Fastener devices.

12.5.1.2.2.4. Horizontal, vertical, and angle grinders with wheels greater than 2 inches in diameter.

12.5.1.2.2.5. Belt sanders.

12.5.1.2.2.6. Reciprocating saws.

12.5.1.2.2.7. Saber, scroll, and jigsaws with blade shanks greater than a nominal one-quarter of an inch.

12.5.1.2.2.8. Other similarly operating powered tools.

12.5.1.2.2.9. All other hand-held powered tools such as routers, planers, and shears may be equipped with a positive “on-off” control. Use of Ground Fault Circuit Interrupter (GFCI) devices is recommended with these types of equipment.

12.5.1.3. Fire Hazards. Electric powered hand tools will not be used near flammable materials or in explosive atmospheres unless they are approved to meet the requirements of the NEC for the type of area and atmosphere in which the tool is to be used.

12.5.1.4. Grounding. All portable electric tools with exposed metal parts will be grounded according to the requirements of the NEC. When grounds are not included as part of the power cable, as in approved three-wire cords, an additional wire will be used to effectively ground the tool. An incomplete grounding circuit can subject the user to electrical shock. Double-insulated portable electric hand tools (grounding wire not required) are authorized. The ground prong of a three-wire plug will never be removed. If a cord is found with the ground prong removed, it will be removed from service, rendered unusable, and turned in for repair.

12.5.1.5. Damp Locations. When electric powered tools are used in damp or wet locations, such as in tanks, boilers or outdoors, effective grounding is absolutely necessary. GFCI devices will be used.

12.5.1.6. Electric Powered Tools. Because of their source of power, electric powered tools often present the same hazards as other electrical facilities and equipment. Personnel who use electric power tools will be responsible for being familiar with accepted safe operating standards and, also, with the general hazards of electricity associated with tool use.

12.5.2. Specific Requirements:

12.5.2.1. Portable Circular Saws. All portable, power-driven circular saws having a blade diameter greater than 2 inches shall be equipped with guards above and below the base plate shoe. The upper guard shall cover the saw to the depth of the teeth, except for the minimum arc required to permit the base to be tilted for bevel cuts. The lower guard shall cover the saw to the depth of the teeth, except for the minimum arc required to allow proper retraction and contact with the work. When the tool is withdrawn from the work, the lower guard shall automatically and instantly return to cover the blade. A circular saw with a sticking spring-operated guard shall be removed from service and repaired before workers are allowed to use it. The most common injuries which occur when using portable circular saws are the result of contact with the blade, electric shock or burns, tripping over cords or saws, losing balance while using the saw, dropping the saw on oneself or another person, and kickbacks from pinching blades in the cut. Severe eye injuries result from flying sawdust or small particles (OSHA 29 CFR 1910.243)

12.5.2.1.1. When using the circular saw, workers will not stand directly behind the saw while cutting operations are in progress. Kickbacks sometimes occur, and if the lower guard sticks, the moving saw blade could come in contact with the operator's body causing severe injury. The saw's telescoping saw guard will be checked frequently while in use to ensure it works freely, encloses the teeth as completely as possible, and covers the unused portion of the blade when it is cutting. Both upper and lower guards will be kept clean and free of sawdust or dirt accumulations. Workers will remove the power cord from the power supply when checking the guards; cleaning or installing and removing the blade; and performing maintenance.

12.5.2.1.2. Periodic inspections are essential to discover operating defects. A systematic inspection schedule and maintenance record for each tool will help prevent mishaps and ensure maximum use of the tool at a minimum operating cost. During the inspection, defective tools will be taken out of service immediately and tagged for repair. Employees will be instructed to inspect tools used on the job site and will be trained to recognize defects and improper functioning. The extent of this inspection and the responsibility for correcting defects should be clearly outlined so there is neither unnecessary duplication of effort nor misunderstanding regarding the responsibility for maintenance. Additional guidance on carpenter and (or) woodworking equipment can be found in **Chapter 18**. (OSHA 29 CFR 1910.243)

12.5.2.2. Chain Saws. The following safety precautions shall be observed by all users of chain saws:

12.5.2.2.1. Do not operate a chain saw when fatigued.

12.5.2.2.2. Use safety footwear, snug-fitting clothing, protective gloves, and eye, hearing, and head protection devices. Use leggings as described in **Chapter 14** (when possible).

12.5.2.2.3. Use caution when handling fuel. Allow the engine to cool before refueling. Move the chain saw at least 10 feet from the fueling point before starting the engine.

12.5.2.2.4. Do not allow other persons to be near the chain saw when starting or cutting with the chain saw. Keep bystanders and animals out of the work area.

12.5.2.2.5. Do not start cutting until you have a clear work area, secure footing, and a planned retreat path from the falling tree or limb, etc.

12.5.2.2.6. When the engine is running, hold the chain saw firmly with both hands. Use a firm grip with thumbs and fingers encircling the chain saw handles.

12.5.2.2.7. Keep all parts of the body away from the saw chain when the engine is running.

12.5.2.2.8. Before starting the engine, ensure the saw chain is not contacting anything.

12.5.2.2.9. Carry the chain saw with the engine stopped, the guide bar and saw chain to the rear, and the muffler away from the body.

12.5.2.2.10. Do not operate a chain saw that is damaged, improperly adjusted, or not completely and securely assembled. Ensure the saw chain stops moving when the throttle control trigger is released. Whenever the guide bar is worn to a point where the chain will tilt sideways, replace the bar. Keep the chain sharp. A dull chain requires the use of extra pressure by the operator, lessening control over the saw.

12.5.2.2.11. Shut off the chain saw engine before setting it down.

12.5.2.2.12. Use extreme caution when cutting small size brush and saplings because slender material may catch the saw chain and be whipped toward you or pull you off balance.

12.5.2.2.13. When cutting a limb that is under tension, be alert for springback so you will not be struck when the tension in the wood fibers is released.

12.5.2.2.14. Keep the handles dry, clean, and free of oil or fuel mixture.

12.5.2.2.15. Operate the chain saw only in well-ventilated areas.

12.5.2.2.16. Do not operate a chain saw in a tree unless you have been specifically trained for the operation.

12.5.2.2.17. Ensure all chain saw service, other than the items listed in the owner's manual maintenance instructions, is performed by competent chain saw service personnel. (For example, if improper tools are used to remove the flywheel or to hold the flywheel in order to remove the clutch, structural damage to the flywheel could occur and subsequently cause the flywheel to burst.)

12.5.2.2.18. Guard against kickback. Kickback is the upward motion of the guide bar that occurs when the saw chain at the nose of the guide bar contacts an object. Kickback can lead to dangerous loss of control of the chain saw. To reduce kickback:

12.5.2.2.18.1. Hold the chain saw firmly with both hands.

12.5.2.2.18.2. Do not overreach.

12.5.2.2.18.3. Do not let the nose of the guide bar contact a log, branch, ground, or any other obstruction.

12.5.2.2.18.4. Cut at high engine speeds.

12.5.2.2.18.5. Do not cut above shoulder height.

12.5.2.2.18.6. Follow manufacturer's maintenance instructions when sharpening or performing maintenance on the chain saw.

12.5.2.2.18.7. Use devices, such as low-kickback chain, guide bar nose guards, chain brakes, and special guide bars, that reduce the hazards associated with kickback.

12.5.2.2.19. When transporting the chain saw, use the appropriate guide bar scabbard.

12.5.2.3. Powder-Actuated Tools. Cartridge-type explosives are the source of power for this group of hand tools. Their use is accompanied by hazards normally encountered when using ammunition and other explosives. These tools are used primarily to sink fasteners into nonbrittle surfaces, such as driving studs into steel or concrete, and tightening rivets.

12.5.2.3.1. Training: Workers will be thoroughly instructed in the safe use of any powder-actuated tool before being permitted to operate it.

12.5.2.3.1.1. All training will be conducted by a authorized/qualified instructor.

12.5.2.3.1.2. The students must be able to:

12.5.2.3.1.3. Understand the manufacturer's instruction manual.

12.5.2.3.1.4. Clean the tool correctly.

12.5.2.3.1.5. Recognize any visibly worn or damage parts, or defective operation.

12.5.2.3.1.6. Recognize the number-color code system to identify powder load levels.

12.5.2.3.1.7. Use the tool correctly within the limitations of its use and correctly operate the tool in the presence of the instructor.

12.5.2.3.1.8. After training, the operator shall substantiate their competency by satisfactorily completing a written examination provided by the manufacturer of the tool.

12.5.2.3.1.9. Each student who meets the requirements as indicated in **12.5.2.3.3.** shall receive a qualified operator's card, issued and signed by both the instructor and applicant. While using the tool, all operators shall have this card in their possession.

12.5.2.3.2. When a tool of this type is suggested for a task, a thorough study of the operation will be made. Kinds of materials encountered, size and strength of explosives needed, and possible dangers to nearby workers will all be considered before tools are issued to operators. In the event of a misfire, the operator shall hold the tool firmly against the work surface for a period of 30 seconds and then follow the explicit instruction set forth in the manufacturer's instruction manual. A sign, at least 20 cm x 25 cm (8" in x 10" in), using boldface type that is not less than 2.5 cm (1 in) in height, shall be posted in plain sight where powder-actuated tools are used a sign shall be posted in the are of tool use and in areas adjacent to tool use where walls, floors, or working surface penetration may pose a hazard. At a minimum, the sign should bear wording similar to the following: POWDER-ACTUATED TOOL IN USE.

12.5.2.3.3. Ammunition and charges for these tools and the tools themselves will be secured.

12.5.2.3.4. Each tool will be equipped with a steel muzzle guard at least 3-1/2 inches in diameter, mounted perpendicular to the barrel, and designed to confine flying fragments or particles that might otherwise create a hazard. When a standard shield or guard cannot be used, or when it does not cover all apparent avenues through which flying particles might escape, a manufacturer's special shield or guard, fixture, or jig that provides equal protection may be used instead of the standard steel guard. To use the tool inside boxes or recessed areas, the guard will be secured to the muzzle so it can be easily adjusted.

12.5.2.3.5. Cartridge-powered tools will be constructed to prevent operation if they are not fitted with a muzzle guard or protective jig of the manufacturer's design.

12.5.2.3.6. All tools of this type will be constructed so they cannot be fired unless the operator is holding the tool against a work surface with a force at least 5 pounds greater than the total weight of the tool.

12.5.2.3.7. Powder-actuated tools equipped with standard muzzle guards will be built so the operation will be prevented if the guard is tilted more than 8 degrees from contact with the working surface.

12.5.2.3.8. No fastener of any kind will be driven into masonry closer than 3 inches to a corner or edge. Unless jigs or special guards are used to stop flying particles, fasteners will not be fired into steel closer than one-half of an inch to an edge, corner, or joint.

12.5.2.3.9. Projectile firing tools will be constructed to prevent discharge if dropped.

12.6. Personal Protective Clothing and Equipment:

12.6.1. Clothing. Each portable power tool operator will wear suitable work clothes. Operators will, if necessary, wear caps or other garments to keep their hair from coming in contact with rotating or moving parts of the tool (refer to **Chapter 14**). No worker will wear loose sleeves, neckties, rings, or other clothing or jewelry that could become tangled in a hand power tool (refer to **Chapter 9**).

12.6.2. Protective Eyewear and Respirators:

12.6.2.1. Operators will wear protective eyewear and (or) face shields for hand power tool operations that may cause flying particles (refer to **Chapter 14**). Overhead work makes this requirement extremely important.

12.6.2.2. Workers will use respirators approved by the Bureau of Mines or National Institute for Occupational Safety and Health (NIOSH) for the agent of concern. The installation BEE will be consulted for specific advice on the respiratory protection required for specific shop activities on the job site according to AFOSH Standard 48-137, *Respiratory Protection Program*.

Figure 12.1. Hand and Tools and Portable Tools Safety Checklist.

F12.1. This is not an all inclusive checklist. It, like all the checklists in this standard, simply highlights some critical items in the corresponding chapters. Other requirements exist that are not included in the checklist. Where appropriate, MAJCOMs, FOAs DRUs, local safety staffs, and supervisors will add to this checklist to include command or individual location or shop-unique requirements or situations.

F12.1.1. Are tools stored on rack or shelves or in boxes when not in use? (Reference **12.3.1.**)

F12.2. Are running powered tools left unattended while running? (Reference **12.3.1.**)

F12.3. Are hand tools properly maintained and kept in good repair by a qualified person? (Reference **12.3.3.**)

F12.4. Do workers carry tools in tool belts or other carrying device when climbing ladders or while working at elevated heights such as scaffolds, platforms, or work stands? (Reference **12.3.4.**)

F12.5. Are workers allowed to drop tools from elevated surfaces, or throw tools back and forth to each other, possibly causing an injury? (Reference **12.3.4.**)

F12.6. Are tools inspected for defects and defective tools immediately removed from service. (Reference **12.3.5.**)

F12.7. Are screwdrivers used only for their intended purpose and not as chisels, punches, or pry bars? (Reference **12.4.1.1.**)

F12.8. Are standard head screwdrivers maintained with square edges and free of chips? (Reference **12.4.1.1.**)

F12.9. Is small work requiring the use of a screwdriver secured in a vise or by other suitable means and not held by hand, under the arm, or in the lap? (Reference **12.4.1.2.**)

F12.10. Are chisels and punches with mushrooming heads removed from service? (Reference **12.4.2.**)

F12.11. When wrenches are used do workers ensure they are the proper size for the fastener involved and the wrench is securely seated on the item to be turned? (Reference **12.4.3.1.**)

F12.12. Are hammers with loose or damaged handles removed from service immediately? (Reference **12.4.4.**)

F12.13. Are hammers used for their designed purpose and function? (Reference **12.4.4.**)

F12.14. Are handsaws selected and used for their designed purpose, i.e., crosscut saw for cutting across wood grain, a ripsaw for cutting with wood grain, and a hacksaw for cutting metal? (Reference **12.4.5.1.1.**)

F12.15. Are blades such as knives, razor blades, utility knives, exacto, knives, etc., properly protected or sheathed? (Reference **12.4.7.**)

F12.16. When powered hand tools are used is care taken to prevent cords, cables, and hoses from becoming tripping hazards? (Reference **12.5.1.1.1.**)

F12.17. Are powered portable hand tools raised or lowered by the cord or cable rather than carried in a device designed for such a purpose? (Reference **12.5.1.1.3.**)

F12.18. Are powered tools equipped with a constant pressure switch or control that when released shuts off the tools? (Reference **12.5.1.2.1.**)

F12.19. Are switches on powered equipment protected against accidental start-up or operation? (Reference **12.5.1.2.1.**)

F12.20. Are portable powered tools with exposed metal parts properly grounded or double insulated? (Reference **12.5.1.4.**)

F12.21. Portable Circular Saws.

F12.21.1. Are all portable circular saws equipped with a blade diameter greater than 2 inches equipped with guards above and below the base plate shoe? (Reference **12.5.2.1.**)

F12.21.2. When the saw is withdrawn from the stock being cut does the lower guard automatically and instantly return to cover the blade? (Reference **12.5.2.1.**)

F12.21.3. When using a circular saw, does the operator stand to the side and not directly behind the saw while cutting is in progress? (Reference **12.5.2.1.1.**)

F12.21.4. Do workers remove the power source to saws before making any adjustments, cleaning, or performing any maintenance on them? (Reference **12.5.2.1.1.**)

F12.22. Chain Saws.

F12.22.1. Are workers who operate chain saws well rested and alert? (Reference **12.5.2.2.1.**)

F12.22.2. Are workers who operate chain saws wearing safety footwear, snug-fitting clothing, protective gloves, and eye, hearing, and head protection? (Reference **12.5.2.2.2.**)

F12.22.3. Is the chain saw engine allowed to cool before refueling and the chain saw started a minimum of 10 feet from the fueling point? (Reference **12.5.2.2.3.**)

F12.22.4. Are people not involved with the operation kept clear of the work area? (Reference **12.5.2.2.4.**)

F12.22.5. Do workers plan a path of retreat in the event of an unplanned or premature falling tree or limb? (Reference **12.5.2.2.5.**)

F12.22.6. Are chain saws that are not properly maintained, adjusted, or properly assembled removed from service until repairs are made? (Reference **12.5.2.2.10.**)

F12.22.7. Are chain saw operators trained prior to cutting operations, especially when cutting small brush, saplings, and branches that are under tension and present the possibility to spring back and strike the operators? (Reference **12.5.2.2.12.** & **12.5.2.2.13.**)

F12.22.8. Are chain saws only operated in well ventilated areas? (Reference **12.5.2.2.15.**)

F12.22.9. Are saws shut off prior to being set down or transported? (Reference **12.5.2.2.19.**)

F12.23. Powder-Actuated Tools.

F12.23.1. Are workers well trained and familiar with the operation of the tool and the characteristics of the materials involved before they are permitted to operate powder-actuated tools? (Reference **12.5.2.3.**)

F12.23.2. Is each tool equipped with a steel muzzle guard at least 3-1/2 inches in diameter, mounted perpendicular to the barrel, and designed to confine flying fragments or particles when the tool is operated? (Reference **12.5.2.3.2.**)

F12.23.3. Are tools designed to operate only when the operator is holding the tool against a work surface with a force at least 5 pounds greater than the total weight of the tool? (Reference **12.5.2.3.4.**)

F12.23.4. Do operators ensure that no fastener of any kind will be driven into masonry within 3 inches to a corner or edge? (Reference **12.5.2.3.6.**)

F12.23.5. Are tools designed to prevent discharge if dropped? (Reference **12.5.2.3.7.**)

F12.23.6. Do operators wear protective goggles or face shields and other protective equipment, such as a respirator when operations require it? (Reference **12.6.2.**)

Chapter 13

FALL PROTECTION

13.1. General Requirements. Fall protection is required to protect employees that need to work or accomplish tasks in elevated locations. Fall protection is also required to guard floor and wall openings and open-sided floors or platforms. For fall protection on aircraft surfaces, see 91-100, Aircraft Flight Line - Ground Operations & Activities.

13.1.1. General Industry. In general industry fall protection is required at 4 feet. The 4 foot rule applies to walking and working surfaces and requires every open-sided floor or platform 4 feet or more above adjacent floor or ground level to be guarded. This requirement also applies to wall openings, window wall openings at a stairway landing, floor, platform, or balcony, from which there is a drop of more than 4 feet, and where the bottom of the opening is less than 3 feet above the platform or landing. Every chute wall opening from which there is a drop of more than 4 feet shall also be guarded. (OSHA 29 CFR 1910.23, *Guarding Floor and Wall Opening and Holes*) See **Chapter 7** for specific information on guarding walking and working surfaces and floor and wall openings.

13.1.2. Construction: In the construction industry fall protection is required at 6 feet. The 6 foot rule applies to any situation where an employee could fall or contact dangerous equipment. Walking and working surfaces with unprotected sides or edges (horizontal or vertical) where an employee is working 6 feet or more above lower levels will be guarded or the employee otherwise protected from falling. This also applies to employees constructing a leading edge; working in a hoist area; working near an open hole in a floor (including skylights); and when working at the edge of an excavation, well, pit, or shaft. Employees working less than 6 feet from dangerous equipment must also be protected. (OSHA 29 CFR 1926.501, *Duty To Have Fall Protection*)

13.1.2.1. Reinforcing Steel. An employee which could fall into protruding reinforcing steel (rebar) shall be protected to eliminate the hazard of impalement. See AFOSH Standard 91-10, *Civil Engineering*, for additional information. (OSHA 29 CFR 1926.701, *Concrete and Masonry Construction-General Requirements*)

13.1.2.2. Safety Nets. Safety nets are sometimes necessary to accomplish tasks in elevated areas.

13.1.2.2.1. Safety nets shall be provided when work places are more than 25 feet above the ground, water surfaces, or other surfaces where the use of ladders, scaffolds, catch platforms, temporary floors, or personal fall arrest systems are impractical.

13.1.2.2.2. Where safety net protection is required, operations shall not be undertaken until the net is in place and has been tested. Testing consists of dropping a 400-pound bag of sand not more than 30 inches (± 2 inches) in diameter from a height of 25 feet above the net into the center of the net.

13.1.2.2.3. Nets shall extend 8 feet beyond the edge of the work surface where employees are exposed and shall be installed as close under the work surface as practical, but in no case more than 25 feet below such work surface. Nets shall be hung with sufficient clearance to prevent user's contact with the surfaces or structures below. Such clearances shall be determined by impact load testing.

13.1.2.2.4. Only one level of nets is required for bridge work. **NOTE:** The mesh size of nets shall not exceed 6 by 6 inches. All new nets shall meet accepted performance standards of

17,500 foot-pounds minimum impact resistance as determined and certified by the manufacturer, and shall bear a label of proof test. Edge ropes shall provide a minimum breaking strength of 5,000 pounds.

13.1.2.2.5. Forged steel safety hooks or shackles shall be used to fasten the net to its supports.

13.1.2.2.6. Connections between net panels shall develop the full strength of the net.

13.1.2.2.7. Safety net systems and their use shall comply with all provisions in OSHA 29 CFR 1926.502, *Fall Protection Systems Criteria and Practices*.

13.1.3. Vehicle-mounted elevating and rotating work platforms, manually propelled and self-propelled mobile work platforms and scaffolds: When these devices or equipment are used for the purpose of allowing workers to perform duties at elevated levels above 10 feet, controls are required to prevent an employee from falling. Controls may consist of guards, railings, a personnel fall arrest system or other similar device that meets this intent. See **Chapter 16** for additional information. OSHA 29 CFR 1910.29, (*Manually Propelled Mobile Ladder Stands and Scaffolds (Towers)*)

13.1.4. Ladder Safety Devices. Cages or wells shall be provided on ladders of more than 20 feet to a maximum unbroken length of 30 feet. Ladder safety devices may be used on tower, water tank, and chimney ladders over 20 feet in unbroken length in lieu of cage protection. No landing platform is required in these cases. All ladder safety devices such as those that incorporate positioning belts, friction brakes, and sliding attachments shall meet the design requirements of the ladders which they serve. (OSHA 29 CFR 1910.27, *Fixed Ladders*) See **Chapter 7** for specific requirements on ladders.

13.2. Personal Fall Arrest Systems (PFAS). PFAS are often necessary to protect employees that need to accomplish tasks in elevated situations. PFAS should be selected to match the specific task to be accomplished and any possible free fall distance should be kept to an absolute minimum. The work environment must also be considered when selecting a PFAS. **NOTE:** Body belts will not be used as part of a PFAS. Specific PFAS requirements follow:

13.2.1. Personal Fall Arrest Systems (Safety Harnesses, Lanyards, Lifelines, and Positioning belts):

13.2.1.1. Personal fall arrest systems should be selected to match the particular work situation, and any possible free fall distance should be kept to a minimum, in no case shall free fall distance be allowed to exceed 6 feet. Consideration should be given to the particular work environment encountered, for example:

13.2.1.2. The presence of acids, dirt, moisture, oil grease or other substance can cause deterioration of the fall arrest system's ability to function properly.

13.2.1.3. Wire rope or rope covered wire lanyards and some plastics such as nylon will not be used where there is an electrical hazard.

13.2.1.4. Lanyards that are wet shall not be used near power lines or other locations where exposed to energized electrical sources.

13.2.1.5. Lanyards constructed of rope or synthetic materials and rope-covered lanyards will not be used by personnel performing welding or cutting operations, or in areas where sharp edges, open flames, or excessive heat could present a hazard.

13.2.1.6. Where lanyards, connectors, and life lines are subject to damage by work operations such as welding, chemical cleaning, and sandblasting, the component should be protected, or other securing systems should be used.

13.2.1.7. Lanyards will be kept as short as reasonably possible to minimize the length of a free fall. Lanyard length must never permit a vertical fall of more than 6 feet, nor allow the worker to contact any lower level. Lanyards will be attached to a dropline, lifeline, or fixed anchorage point by means which will not reduce its required strength.

13.2.1.8. An energy (shock) absorber component whose primary function is to dissipate energy and limit deceleration forces which the system imposes on the body during fall arrest, will be used with all fall arrest systems. These devices may employ various principles such as deformation, friction, tearing of materials, or breaking of stitches to accomplish energy absorption. An energy absorber may be borne by the user or be a part of a horizontal lifeline subsystem or a vertical lifeline subsystem.

13.2.1.9. Supervisors must maintain manufacturer's performance testing information for the personal fall arrest system being used. The fall arrest system must meet test requirements of ANSI Standard Z359.1, *Safety Requirements for Personal Fall Arrest Systems, Subsystems, and Components*.

13.2.1.10. It is common practice to interchange lanyards, connectors, lifelines, deceleration devices, and body harnesses since some components wear out sooner than others. However, NOT all components are designed to be interchangeable. For example, a lanyard should never be substituted for the lifeline. Personnel using fall arrest systems will be trained in the safe use of the fall arrest system prior to use. This training will include application limits, proper anchoring and tie-off techniques, estimation of free fall distance, including determination of deceleration distance, and total fall distance to prevent striking a lower level, methods of use, inspection, and storage as well as manufacturer's recommendations.

13.2.1.11. When personal fall arrest systems are used, the supervisor must ensure that workers can be properly rescued or can rescue themselves should a fall occur. The availability of rescue personnel, ladders, or other rescue equipment must be considered prior to working in areas which require a fall arrest system.

13.2.2. Procurement. Supervisors must fully evaluate the work conditions and environment before selecting the appropriate personal fall protection system.

13.2.2.1. Once in use, the system's effectiveness should be monitored, to determine cleaning and maintenance requirements.

13.2.2.2. Fall protection and rescue equipment may be locally or centrally procured. All equipment purchased will meet or exceed the requirements outlined in ANSI Standard Z359.1. Only commercially manufactured fall and rescue equipment will be used. The use of "homemade" or modified equipment is strictly prohibited.

13.2.2.3. Equipment purchased will have the manufacturer's name, identification code, and the date of manufacture stamped on the equipment or on a permanently attached tag.

13.2.2.4. Connectors. Materials used in the construction of PFAS connectors (hardware, or a component or element which is used to couple parts of the system together such as a carabiner, D-ring,

O-ring, oval ring, or snaphook, etc) will be high tensile alloy steel produced by forging, stamping, forming or machining.

13.2.2.4.1. All connectors will be new when put into initial use and the finish shall be clean and free of scale, rust, or deposits of foreign matter.

13.2.2.4.2. Snaphooks and carabiners shall be self-closing and self-locking and will be designed so that it takes two consecutive and deliberate actions to open them.

13.2.2.5. Full body harness.

13.2.2.5.1. The harness will provide support across the lower chest, over the shoulders, and around the thighs, and when properly fitted and used, shall prevent the possibility of the worker falling out.

13.2.2.5.2. The attachment point of the body harness shall be located in the center of the wearer's back near shoulder level, or above the wearer's head.

13.2.2.5.3. The load bearing straps of the harness shall have a minimum width of 1-5/8 inch and be finished to prevent fraying.

13.2.2.6. Lanyards. The free end of lanyards of synthetic materials will be lightly seared and, in the case of natural fiber rope, will be seized (whipped). Knots will not be used to form lanyard end terminations. Lanyards that have been subject to impact loading from a falling person or weight test will be removed from service and destroyed.

13.2.2.7. Energy absorber components. Energy absorbers will be designed so it is obvious if it has been activated.

13.2.2.8. Anchorage connectors. Anchorage connectors shall be capable of withstanding (without breaking) a 5000 pound load multiplied by the maximum number of PFAS that may be attached to the connector. No more than one PFAS will be connected to an anchorage point unless specifically certified for such a purpose. Anchorage connectors will not be exposed to sharp edges, abrasive surfaces and physical hazards such as thermal, electrical, or chemical sources.

13.2.2.9. Fall arrester components. Fall arresters shall be automatic in their locking (fall stopping) function.

13.2.3. Inspections.

13.2.3.1. Users of fall arrest systems will comply with TO 00-25-245, *Testing and Inspection Procedures Personnel Safety and Rescue Equipment*, and all manufacturer instructions regarding the inspection, maintenance, cleaning, and storage of PFAS equipment. The using organization will maintain copies of the manufacturer's instructions.

13.2.3.2. All fall arrest systems will receive a thorough inspection with documentation of the inspection, to include inspection prior to each use for mildew, wear, damage, and other deterioration. Any defective component shall be removed from service if its strength or function is in question. (OSHA 29 CFR 1910.66, *Powered Platform For Building Maintenance*)

13.2.3.3. When inspection reveals defects or damage to equipment or inadequate maintenance of equipment, the equipment will be immediately tagged as "unserviceable" and removed from service and repairs made before being returned to service. Equipment which is in need of or overdue

scheduled maintenance will also be tagged as "unserviceable" and immediately removed from service. Examples of components which must be removed from service:

13.2.3.3.1. Components with an absence of or illegible markings.

13.2.3.3.2. Absence of any element which affect the equipment form, fit, or function.

13.2.3.3.3. Evidence of defects in or damage to hardware elements including distorted hooks or faulty hook springs; tongues unfitted to shoulder buckles; loose or damaged mountings; non-functioning parts; cracks, sharp edges, deformation, corrosion, chemical attack, excessive heating, alteration, deterioration, contact with acids or other corrosives; and excessive wear.

13.2.3.3.4. Evidence of defects or damage to straps or ropes including fraying, unsplicing, unlaying, kinking, knotting, roping, broken or pulled stitches, excessive elongation, chemical attack, excessive soiling, cuts, tears, abrasion, mold, undue stretching, alteration, needed or excessive lubrication, excessive aging, contact with heat, fire, or corrosives; internal or external deterioration, and excessive wear.

13.2.3.3.5. Alteration, additions which may effect efficiency, absence of parts, or evidence of defects in, damage to or improper function of mechanical devices and connectors.

13.2.4. Maintenance and Storage Requirements:

13.2.4.1. Maintenance and storage of equipment will be conducted by the user organization according to the manufacturer's instructions. Unique issues, which may arise due to conditions of use, shall be addressed with the manufacturer. The manufacturer's instructions will be retained for reference.

13.2.4.2. Equipment will be stored in a manner to preclude damage from environmental factors such as heat, light, excessive moisture, oil, chemicals and their vapors, or other degrading elements.

13.3. For fall protection on aircraft surfaces, see AFOSH Standard 91-100, *Aircraft Flight Line – Ground Operation & Activities*.

Figure 13.1. Fall Protection Checklist.

F13.1. This is not an all inclusive checklist. It, like all the checklists in this standard, simply highlights some critical items in the corresponding chapters. Other requirements exist that are not included in the checklist. Where appropriate, MAJCOMs, FOAs DRUs, local safety staffs, and supervisors will add to this checklist to include command or individual location or shop-unique requirements or situations.

F13.1.1. Is reinforcing steel (rebar) protected to eliminate the hazard of impalement to an employee that could possibly fall on the rebar? (Reference **13.1.2.1.**)

F13.2. Are safety nets provided when work places are 25 feet above the ground, water surface, or other surfaces where the use of ladders, scaffolds, catch platforms, temporary floors, or personal fall arrest systems are impractical? (Reference **13.1.2.2.1.**)

F13.3. Are safety nets tested prior to commencement of operations? (Reference **13.1.2.2.2.**)

F13.4. Are cages or wells provided on ladders of more than 20 feet to a maximum unbroken length of 30 feet? **NOTE:** Ladder safety devices that incorporate lifebelts, friction brakes and sliding attachments may be used in lieu of cage protection on ladders over 20 feet in unbroken length provided they meet the design requirements of the ladders which they serve. (Reference **13.1.4.**)

F13.5. Personal Fall Arrest Systems (PFAS).

F13.5.1. Are PFAS selected to match the work situation and the environment in which it will be employed? (Reference **13.2.**)

F13.5.2. Is any possible free fall distance kept to an absolute minimum? (Reference **13.2.1.1.**)

F13.5.3. Is the use of wire rope or rope covered wire lanyards and plastics such as nylon prohibited where an electrical hazard may be present? (Reference **13.2.1.3.**)

F13.5.3. Is the use of lanyards that are wet prohibited near power lines or locations where exposed energized electrical sources are present? (Reference **13.2.1.4.**)

F13.5.4. Are components of PFAS protected or prohibited where operations involve welding or cutting operations, or in areas where sharp edges, open flames, or excessive heat could be present? (Reference **13.2.1.5.**)

F13.5.5. Is lanyard length such that a vertical fall of more than six feet not possible, nor would the worker be allowed to contact any lower level? (Reference **13.2.1.7.**)

F13.5.6. Is an energy (shock) absorber component incorporated into each PFAS used? (Reference **13.2.1.9.**.)

F13.5.7. Do supervisors maintain manufactures performance testing information for each PFAS being used? **13.2.1.10.**

F13.5.8. Are all workers trained in the safe use of a fall system prior to using it? (Reference **13.2.1.11.**)

F13.5.9. In the event of a fall arrest can workers rescue themselves, and if not are other rescue procedures and equipment in place to rescue workers prior to starting operations? (Reference **13.2.1.11.**.)

F13.5.10. Does all fall protection equipment and components meet or exceed requirements outlined in ANSI Standard Z359.1? **NOTE:** Equipment should indicate if it meets this standard, furthermore, the manufacture's name, identification code, and the date of manufacture will be permanently stamped or affixed on the equipment. (Reference **13.2.2.** & **13.2.2.3.**)

F13.5.11. Are all PFAS connectors made of high tensile alloy steel produced by forging, stamping, machining, or forming; and are connectors new and free from scale rust or other foreign deposits. (Reference **13.2.2.4.** & **13.2.2.4.1.**)

F13.5.12. Are snaphooks and carabiners self-closing and self-locking and designed so it takes two consecutive and deliberate action to open them? (Reference **13.2.2.4.2.**)

F13.5.13. Are only full body harnesses used in conjunction with PFAS? (Reference **13.2.2.5.**)

F13.5.14. When properly adjusted does the harness prevent any possibility of the worker falling out of the harness? (Reference **13.2.2.5.1.**)

F13.5.15. Is the attachment point on the harness located in the center of the wearer's back near shoulder level or above the wearer's head? (Reference **13.2.2.5.2.**)

F13.5.16. Are lanyards that have been subjected to a fall arrest or impact loading for testing removed from service and destroyed? (Reference **13.2.2.6.**)

F13.5.17. Are energy (shock) absorbers designed so that it is obvious to tell is it has been activated? (Reference **13.2.2.7.**)

F13.5.18. Are anchorage connectors capable of withstanding a 5000 pound load and not used for more than one PFAS unless specifically designed and certified for multiple PFAS connections? (Reference **13.2.2.8.**)

F13.6. Has the supervisor maintained the manufacturer's performance testing information for the personal fall arrest system being used? (Reference **13.2.3.1.** & **13.2.1.10.**)

F13.7. Does the user organization maintain and store equipment according to the manufacturer's instructions? (Reference **13.2.4.1.**)

F13.8. Is equipment, which is in need of or overdue scheduled maintenance, tagged as "unserviceable" and immediately removed from service? (Reference **13.2.3.3.**)

F13.9. In the absence of manufacturer's instruction is equipment stored in a manner which precludes damage from environmental factors such as heat, light, excessive moisture, oil, chemicals and their vapors, or other degrading elements? (Reference **13.2.4.2.**)

Chapter 14

PERSONAL PROTECTIVE EQUIPMENT (PPE)

14.1. General Information: Essential regulatory requirements are contained in Occupational Safety and Health Administration (OSHA) 29 Code of Federal Regulations (CFR) 1910.132, *Personal Protective Equipment, General Requirements*; 1910.133, *Eye and Face Protection*; and 1910.135, *Head Protection*. Portions of non-regulatory consensus standards, such as the National Safety Council's *Accident Prevention Manual for Business and Industry*, and applicable sections of existing AFOSH standards have been incorporated into this chapter. **NOTE:** Normal work or seasonal clothing is not covered by this standard. US Air Force Fire Protection clothing and equipment, respiratory protection, aircrew protective clothing, chemical warfare clothing, laser radiation, welding, cutting and brazing operations and protection against bloodborne pathogens are also not addressed. Refer to the following publications for information on these areas:

— Fire Protection Clothing and Equipment--National Fire Protection Association (NFPA) and OSHA Standards.

— AFOSH Standard 48-137, *Respiratory Protection Program*, and OSHA 29 CFR 1910.134, *Respiratory Protection*.

— AFI 11-202V1, *Aircrew Training* and Technical Order (TO) 14P3-1-131, *OPN and Maintenance Instruction With IPB—Aircrew Chem-Defense Ensemble*.

— TO 14P3-1-141, *Operation and Maintenance Instructions — Ground Crew Chem-Defense Ensemble*.

— AFOSH Standard 48-139, *Laser Radiation Protection Program.*

— AFOSH Chapter 27, *Welding, Cutting, and Brazing*.

— OSHA Standards 29 CFR 1910.1030, *Bloodborne Pathogens*; 29 CFR 1910.3127, *Occupational Exposure to Bloodborne Pathogens*; OSHA 29 CFR 1910.3128, *Bloodborne Pathogens and Acute Care Facilities*; OSHA 29 CFR 1910.3129, *Controlling Occupational Exposure to Bloodborne Pathogens in Dentistry*; OSHA 29 CFR 1910.3130, *Occupational Exposure to Bloodborne Pathogens: Precautions for Emergency Responders*, and OSHA 29 CFR 1910.3131, *Bloodborne Pathogens and Long-Term Care Workers*. For information on OSHA guidance, contact the installation ground safety staff.

14.2. Hazards:

14.2.1. Hazards should be engineered out, isolated, guarded against or a safer chemical used as a substitute whenever possible before considering the use of PPE. PPE devices alone should not be relied on to provide protection against hazards, but should be used in conjunction with guards, engineering controls, and sound manufacturing practices.

14.2.2. The supervisor shall assess the workplace to determine if hazards are present, or are likely to be present, which necessitates the use of PPE. If such hazards are present, or likely to be present, the supervisor shall conduct a JSA to identify hazards and PPE required for a particular task. Next, a Job Safety Outline (lesson plan) is accomplished which contains all the job safety training the workers will require (JSAs may be incorporated into the Job Safety Outline) and finally, when the worker receives their training, it is documented IAW AFI 91-301. The supervisor may maintain these three

documents together or as separate documents. Refer to paragraph **1.4.** of this document, AFI 91-202 and AFI 91-301, for further information on the JSA, and Job Safety Outline. **NOTE:** A JSA is not required whenever appropriate guidance covers all safety requirements of an operation or process. Examples are: TO 00-25-172, *Ground Servicing of Aircraft and Static Grounding/Bonding*, and TO 1-1-3, *Inspection and Repair of Aircraft Integral Tanks and Fuel Cells*.

14.2.3. It is necessary to consider certain general guidelines for assessing the eye, face, head, hearing, respiratory, torso, hand, arm, foot, and leg hazards that exist in occupational operations. When PPE is required, the identified or potential hazard must be matched to the proper protective devices. This is accomplished by reviewing the JSA and Material Safety Data Sheets (MSDS), when or if chemicals are involved, for the task being accomplished. Contact the installation ground safety or bioenvironmental engineering staffs for assistance.

14.3. Job Safety Analysis (JSA). Refer to paragraphs **1.4.** and **14.2.2.** of this standard and AFIs 91-202 and 301 for further information on the JSA.

14.4. Responsibilities:

14.4.1. Air Force Safety Center (HQ AFSC). Will:

14.4.1.1. Establish standards for safety programs associated with PPE.

14.4.1.2. Provide professional advice and guidance applicable to PPE.

14.4.1.3. Act as approval authority for variances to AFOSH standard requirements.

14.4.2. Air Force Surgeon General (HQ AF/SG). Will provide professional advice and guidance applicable to occupational health personal protective equipment (OH-PPE).

14.4.3. Air Force Civil Engineering Support Agency (HQ AFCESA/CEXF). Will provide professional advice and guidance applicable to PPE in the realm of fire protection and emergency rescue.

14.4.4. Air Force Education and Training Command (HQ AETC) and Air Force Materiel Command (HQ AFMC) through United States Air Force School of Aerospace Medicine (USAFSAM). Will ensure that all technical courses involved with PPE requirements include, as a minimum, the information provided in this standard.

14.4.5. Major Commands (MAJCOM), Direct Reporting Units (DRU), and Field Operating Agencies (FOA). Will provide program oversight and supplements, as necessary.

14.4.6. Installation Chief of Safety (SE). With assistance from the ground safety staff, the Chief of Safety will:

14.4.6.1. Serve as focal point for implementing this standard.

14.4.6.2. Verify that all installation organizations have implemented a hazard assessment program, which includes JSAs (see paragraphs **1.4.** and **14.2.**), Job Safety Training Outlines, to ensure all workers are afforded adequate protection from identified hazards.

14.4.6.3. When requested, provide commanders and (or) functional managers with interpretation of requirements for PPE.

14.4.6.4. When requested, provide commanders and (or) functional managers with referral information for PPE which may be the responsibility of other installation agencies.

14.4.7. Bioenvironmental Engineering (BE). The BE officials will provide guidance applicable to OH-PPE in the realm of sampling, analysis, and health risk appraisals and (or) hazard evaluations.

14.4.7.1. A Bioenvironmental Engineer (BEE), or a 7/9-skill level Bioenvironmental Engineering Technician (BEET) at installations where no BEE is assigned, will certify that OH-PPE used by US Air Force employees is appropriate for the hazards from each operation (such as respirator, hearing protection, etc.).

14.4.7.2. The BEE and (or) BEET will identify all hazardous workplace operations and prescribe the selection of the proper OH-PPE during baseline, annual, and special purpose surveys. The applicable survey (i.e., baseline, annual, or special purpose) report will identify and describe:

14.4.7.2.1. All hazardous operations or tasks where PPE is required and recommend appropriate controls for adverse exposures.

14.4.7.2.2. The hazard from which the employee must or should be protected and describe the applicable OSHA, AFOSH, and general industry standards.

14.4.7.2.3. The specific OH-PPE that must be worn by the employees.

14.4.7.2.4. The adequacy of the OH-PPE that has been prescribed to protect the employee and any known limitations of the equipment such as breakthrough times, abrasion sensitivity, temperature range, etc.

14.4.7.2.5. Any other PPE that has been made available to the employee and an analysis of any likely interference or incompatibility between the recommended OH-PPE and the other PPE.

14.4.7.3. The BEE or BEET will maintain a list for each workplace and for each task or operation where OH-PPE is used. The case file for each workplace where OH-PPE is used which will contain a list of tasks or operations, the potential hazards, the specific OH-PPE worn, and whether each item of PPE is required to be worn, recommended to be worn, or is electively used.

14.4.7.4. During each baseline survey and annual survey, the BEE will review the list of OH-PPE and compare it with the current operation's potential hazards. If the OH-PPE is adequate to control the potential hazards found, the BEE or BEET will certify the adequacy of the OH-PPE and provide a copy of the certified list with the annual shop survey report. If the OH-PPE cannot be certified, the BEE will recommend actions to resolve the OH-PPE inadequacies. These recommendations include engineering controls, administrative controls, and revisions in the specific OH-PPE for specific tasks or operations. The following list identifies areas of expertise provided by the Bioenvironmental Engineering staff.

14.4.7.4.1. Hearing protection (ear plugs, muffs, etc.).

14.4.7.4.2. Respirators (as defined by AFOSH Standard 48-137).

14.4.7.4.3. Laser eye protection (goggles, glasses, shields, etc.).

14.4.7.4.4. PPE for ionizing radiation (lead gloves, aprons, etc.).

14.4.7.4.5. PPE for ultraviolet radiation (goggles, shields, etc.).

14.4.7.4.6. PPE for heat stress (ice vests, vortex tubes, etc.).

14.4.7.4.7. PPE for ergonomic stresses (knee pads, arm pads, etc.).

14.4.7.4.8. Chemical protective clothing (CPC) (gloves, aprons, coveralls, face shields, goggles, etc.).

14.4.8. Commanders and (or) Functional Managers. Will ensure that all workcenters have conducted and properly documented hazard assessments to determine if hazards are present and take appropriate actions necessary to protect workers from injury, illness, or death. They will ensure PPE is not used as a substitute for engineering hazards out, isolating, guarding, or substitution of hazardous chemicals. Only after engineering and administrative controls have been applied to the maximum extent practicable, or until controls can be installed, will PPE be identified as the primary means to protect personnel against residual or operational hazards.

14.4.9. Supervisors. Must conduct and document hazard assessments in each workplace where their employees are performing duties. If PPE is required, the supervisor will ensure that PPE is provided, used, and maintained in a sanitary serviceable condition. They are responsible for maintaining discipline with regard to personnel wearing properly fitted PPE, when required. They will consult the installation ground safety and installation BE staffs concerning the selection and use of PPE. **NOTE:** All personnel must have job safety training; however, commanders, functional managers, supervisors, and staff members whose work environment is primarily a low-risk administrative area, do not require documentation. Supervisors will document job safety training for all other personnel (refer to AFI 91-301 for further information).

14.4.10. Air Force Personnel. Will:

14.4.10.1. Promptly report safety, fire, and health hazards to supervision or management.

14.4.10.2. Comply with PPE requirements on- and off-duty.

14.4.10.3. Ensure provided PPE is used (when required), adjusted to properly fit, and maintained in sanitary and serviceable condition.

14.4.10.4. Notify their supervisors if they wear contact lenses (this information is vital to emergency medical personnel who may need to remove lens from the individual's eye).

14.4.10.5. Notify supervision about any known medical condition or illness, before exposure to hazardous tasks or operations.

14.5. General Requirements:

14.5.1. Personal Protective Equipment (PPE). PPE will be used whenever there are hazards that can do bodily harm through absorption, inhalation, or physical contact. This equipment includes respiratory and protective devices, special clothing, and protective devices for the eyes, face, head, torso, and extremities. All PPE will be approved for the work performed and will be maintained in satisfactory condition. The installation ground safety and BE officials will be consulted. The BEE is responsible for initial training and fit testing for users of respiratory protection. Supervisors shall instruct personnel in the use and care of this equipment. Training will be documented according to AFI 91-301. (Refer to OSHA 29 CFR 1910.133, *Eye and Face Protection*). (Also refer to AFOSH Standards 48-137 and 48-20, *Hearing Conservation Program*.)

14.5.2. Eye and Face Protection. Employees will be provided and use the appropriate eye or face protection when exposed to hazards from flying particles, molten metal, liquid chemicals, corrosives, caustics, chemical gases, vapors, or potentially injurious light radiation. This requirement also applies

to management, supervisors, and visitors while they are within the hazardous area. Selection will be based on the kind and degree of hazard present.

NOTE: Whenever a task is above eye level and the worker must look up into the area being worked on, eye protection is required to protect against small particles of falling debris.

14.5.2.1. Protective equipment must meet the following minimum requirements:

14.5.2.1.1. Provide adequate protection against the particular hazards for which they are designed;

14.5.2.1.2. Be reasonably comfortable when worn under designated conditions;

14.5.2.1.3. Fit snugly without interfering with the movements or vision of the wearer;

14.5.2.1.4. Be durable;

14.5.2.1.5. Be capable of being disinfected (unless disposal items are used);

14.5.2.1.6. Be easily cleaned;

14.5.2.1.7. Be kept clean and in good repair;

NOTE: Protective eye and face devices must comply with the ANSI Standard Z87.1, Practice for Occupational and Educational Eye and Face Protection.

14.5.2.2. Supervisors will ensure all eye and face protection properly fits their employees before use in hazardous area.

14.5.2.3. Eye and face protection must have the manufacturer's identification clearly marked on the equipment.

14.5.2.4. When limitations or precautions are indicated by the manufacturer, they will be transmitted to the user and strictly observed.

14.5.2.5. Metal framed glasses will be secured with a cord or strap to prevent them from falling into energized circuitry.

14.5.2.6. Safety spectacles are designed with special sturdy frames. Normal street frames with safety lenses are NOT acceptable substitutes and will not be worn.

14.5.2.7. Prescription safety spectacles will only be fitted by qualified optical personnel.

14.5.2.8. Eye goggle headbands that are slack, worn out, sweat soaked, knotted, or twisted will be replaced when they no longer hold the goggles in the proper position.

14.5.2.9. Employees who wear prescription lenses will be provided eye protection that incorporates the prescription in its design, or will wear eye protection that can be worn over the prescription lenses. The protective equipment must not interfere with the wearer's vision or proper position of the protective equipment.

14.5.2.10. Contact lenses, of themselves, do not provide eye protection and will not be worn in eye hazard work environments without the use of appropriate safety eyewear. Gas permeable and soft contact lenses will not be worn with respirators.

14.5.2.10.1. If an individual who must wear corrective lenses uses spectacle inserts with a full-facepiece respirator, the spectacle inserts for the respirator will be purchased by the government using a prescription provided by the user.

14.5.2.10.2. If an individual who must wear corrective lenses elects to wear contact lenses with any respirator, the contact lenses will be purchased by the individual.

14.5.2.11. When working with potentially injurious light radiation, affected employees will wear PPE with filtered lenses that have a shade number appropriate to the protection required (refer to Chapter 27 to AFOSH Standard 91-5, Welding Cutting and Brazing).

14.5.2.12. Face shields will only be used as secondary eye and face protection in areas where splashing, rather than hazardous impact, is the problem. In the case of primary protection, other protective devices, such as safety goggles will be worn. (OSHA 29 CFR 1910.133)

14.5.2.13. Pitted or scratched lenses that reduce visibility will be removed from service and not used.

14.5.2.14. Reduced vision as a result of dirty lenses can become a contributory factor to a mishap. Employees will clean the lenses of eye protection equipment as frequently as necessary to eliminate visibility impairment.

14.5.2.15. Previously used PPE should be disinfected before being reissued to another employee.

14.5.2.16. Employees will maintain and disinfect eye and (or) face protection equipment according to the following instructions:

14.5.2.16.1. Several methods for disinfecting eye-protective equipment are acceptable. The most effective method is to disassemble the goggles or spectacles and thoroughly clean all parts with soap and warm water. Carefully rinse all traces of soap, and replace defective parts with new ones. Swab thoroughly or immerse all parts for 10 minutes in a solution of germicidal deodorant fungicide. Remove parts from solution and suspend in clean place after air drying at room temperature or with heated air. Do not rinse after removing parts from the solution because this will remove the germicidal residue which retains its effectiveness after drying.

14.5.2.16.2. Ultraviolet disinfecting equipment or spray type disinfecting solutions may be used in conjunction with the washing procedure.

14.5.3. Head Protection. Personnel working in areas where there is a potential for injury from falling or flying objects, bumping head against a fixed object, or electrical shock or burns shall be provided and use protective helmets. Typical examples of these areas are construction sites and warehouses. Protective helmets must comply with ANSI Standard Z89.1, *Industrial Head Protection*. (OSHA 29 CFR 1910.135, *Head Protection*)

14.5.3.1. Safety Helmets (Hard Hats). These helmets provide protection from impact and penetration of falling objects and from high-voltage electric shock and burn. Main helmet components consist of a protective shell, inside suspension system designed to act as an energy-absorbing mechanism, and a chin strap to secure the helmet to the head. Hard hats shall provide the level of protection specified by ANSI Standard Z89.1. The manufacturer's name, ANSI Standard Z89.1, and the Type or Class will be identified inside the shell. The crown strap shall form a cradle for supporting the helmet on the wearer's head. The distance between the top of the head and the

underside of the shell should be adjusted to the manufacturer's requirement for the particular helmet being used. Any part of the helmet that comes into contact with the wearer's head must not be irritating to the skin.

14.5.3.1.1. ANSI Safety Helmet Classification:

14.5.3.1.1.1. Type I (Impact Type). Type I, helmets are intended to reduce the force of impact resulting from a blow on to the top of the head.

14.5.3.1.1.2. Type II (Impact Type). Type II, helmets are intended to reduce the force of impact resulting from a blow which may be received off center or to the top of the head.

14.5.3.1.1.3. Class G. (Electrical – General). Class G helmets are intended to reduce the danger of contact exposure to low voltage conductors.

14.5.3.1.1.4. Class E (Electrical). Class E helmets are intended to reduce the danger of exposure to high voltage conductors.

14.5.3.1.1.5. Class C (Conductive). Class C helmets are not intended to provide protection against contact with electrical conductors.

14.5.3.1.2. Color Identification. Safety helmets will not be painted as certain paints may hide cracks or defects in the outer shell and destroy or degrade the insulating characteristics of the shell. Helmets are manufactured in a wide variety of colors and units should purchase helmets manufactured in a color that meets their particular requirement rather than painting them. Colored helmets will meet the requirements of ANSI Standard Z89.1.

14.5.3.1.3. Identification Markers. Affix identification markers on shells without making holes through the shell and without the use of any metal parts or metallic labels. (Holes could cause the helmet to fail the electrical insulation test and degrade the impact design of the helmet.) **NOTE:** The wearer should be able to identify the type of helmet by looking inside the shell for the manufacturer, ANSI designation, and class. For example:

Manufacturer's Name

ANSI Z89.1

Applicable Type and Class designations.

14.5.3.1.4. Use of Decals. The use of decals on safety helmets is only authorized if approved by the unit's MAJCOM, DRU, or FOA. If approved by the MAJCOM, DRU, or FOA, the following restrictions will apply.

14.5.3.1.4.1. Decals will be limited to unit or MAJCOM emblems and the individual's name.

14.5.3.1.4.2. Decals or emblems should be the stick-on type only, no more than 3 inches in nominal diameter.

14.5.3.1.4.3. Names should be stick-on with each letter no more than 1/2 inch by 1/2 inch.

14.5.3.1.5. Inspection. Inspect safety helmets prior to each use. Any one of the following defects is cause for immediate removal from service:

14.5.3.1.5.1. Suspension systems that show evidence of material cracking, tearing, fraying, or other signs of deterioration.

14.5.3.1.5.2. Any cracks, perforations of brim or shell, deformation of shell, or evidence of exposure to excessive heat, chemicals, or radiation.

14.5.3.1.5.3. Any accumulation of conductive material on or inside the shell that cannot be removed prior to use. This applies to helmets used in electrical hazardous environments.

14.5.3.1.6. Maintenance. Do not place objects inside the safety helmets between the shell and the suspension device. This space is designed into the helmet so the impact force will not be transmitted to the head of the wearer.

14.5.3.1.6.1. Keep safety helmets free of abrasions, scrapes, and nicks and do not deliberately drop, throw, or otherwise abuse them because this causes them to lose their protective qualities. Do not store helmets in direct sunlight or where exposed to extreme heat as this may degrade the degree of protection offered. **NOTE:** Shells constructed of polymer plastics are susceptible to damage from ultraviolet light and gradual chemical degradation. This degradation first appears as a loss of surface gloss called chalking and with further deterioration, the surface will begin to flake away.

14.5.3.1.6.2. Do not drill ventilation holes in safety helmets.

14.5.3.1.6.3. Shells should be scrubbed with a mild detergent and rinsed in clear hot water (approximately 140 degrees Fahrenheit [F]). After rinsing, carefully inspect the shell for any signs of damage. Dry with clean soft cloths or air dry. If the use of a solvent is necessary to remove tars, paints, oils, or other materials the manufacturer will be consulted since some solvents may damage the shell.

14.5.3.2. Chinstraps. Chinstraps shall be made of nonconductive material not less than 12.7 mm (1/2 inch) in width. An adjustable chin strap is designed to fit under the chin to secure the helmet to the head. Safety helmets are of little use if they do not fit securely on the head and remain in place when impacted by a falling object. The chin strap will be used whenever personnel are in an area where there is a possibility of impact and penetration by falling objects or high-voltage electrical shock and burns.

14.5.3.3. Bump Caps. Bump Caps are constructed of lightweight materials and are designed to provide minimal protection against bumps or lacerations to the head. They do not afford adequate protection from high impact forces or penetration by flying or falling objects. They shall not be used as a substitute for hard hats. Their use will be determined by supervisors, in conjunction with the installation ground safety staff.

14.5.3.4. Hair Protection:

14.5.3.4.1. Men and women who work around chains, belts, rotating devices, suction devices, blowers, etc., shall cover their long hair to prevent it from being caught in moving equipment. While such equipment is normally guarded, long hair can fit between the mesh of guards and be drawn into the moving parts.

14.5.3.4.2. The length of hair which poses a hazard varies with the operation performed and the control measures used.

14.5.3.4.3. The supervisor, being most knowledgeable of the operation, should determine what constitutes an acceptable hair length. Normally, hair longer than 4 inches and in close

proximity to moving components should be considered hazardous. However, the supervisor may request the installation ground safety or BE staffs' assistance.

14.5.3.4.4. Bandannas, disposable caps, hairnets, and turbans may be used, providing they cover the hair completely and do not themselves present a hazard to the wearer. **NOTE:** The effect of long hair should be considered when conducting a workplace JSA.

14.5.4. Hearing Protection. Exposure to high noise levels can cause hearing loss or impairment, in addition to physical and psychological stress. Specifically designed protection is required, depending on the type of noise encountered and the auditory condition of the employee. AFOSH Standard 48-19, *Hazardous Noise Program* is the primary Air Force directive on hazardous noise exposure policies, responsibilities, and procedures (including hearing protective device information). Contact the local BEE for information on the Air Force Hearing Protection Program. (OSHA 29 CFR 1910.95, *Occupational Noise Exposure*.)

14.5.5. Respiratory Protection. References concerning the control of occupational diseases caused by breathing air contaminated with harmful dusts, fogs, fumes, mists, gases, smokes, sprays, vapors, or in oxygen-deficient environments can be found in AFOSH Standard 48-137 and OSHA 29 CFR 1910.134, *Respiratory Protection*. Operations that generate hazardous dusts such as lead, cadmium, beryllium, and asbestos require the use of protective clothing to prevent injury and the spread of contamination. Contact the local BEE for information on the Air Force Respiratory Protection Program or protective clothing requirements for hazardous particles and dusts. At locations where neither BEE nor occupational or environmental health personnel are readily available, supervisors will contact the support medical facility or the next higher headquarters for assistance in obtaining respiratory protection guidance.

14.5.6. Torso Protection. The torso is the largest exposed area of the body. A variety of protective clothing is available to protect personnel from processes such as heat, hot metals, liquids, impacts, cuts, corrosives, caustics, and radiation. Items such as vests, jackets, aprons, coveralls, and full body suits have been specifically designed for this purpose. Supervisors must take into consideration the hazards involved with an operation before selecting the proper protective equipment. Many times the protection required for a task is actually a combination of several different pieces of PPE. For example, cloth coveralls protect wood workers against minor cuts and abrasions; however, coveralls alone would be inappropriate for the task of operating a table saw. The addition of a leather apron and eye protection may be more appropriate.

14.5.7. Hand and Arm Protection. When an employee's hands or arms are exposed to hazards such as those from skin absorption of harmful substances, severe cuts, lacerations, abrasions, punctures, chemical burns, or harmful temperature extremes, appropriate hand or arm protection shall be provided and used. Sleeves, padded arm protectors, hand pads, and other items will be worn to protect the hands and arms when hot or sharp materials are handled. There is a wide assortment of gloves, hand pads, sleeves, and wristlets for protection against various hazardous situations. Before purchasing any protective equipment, ensure that the manufacturer's recommended use for the glove matches the particular application and anticipated hazards involved. Supervisors will base the selection of appropriate hand protection on the characteristics required relative to the task to be performed, dexterity required, conditions present, duration of use, frequency, physical stresses, limitations of protective clothing, and degree of exposure to identified hazards.

14.5.7.1. Multi-Use Gloves. These gloves are generally worn to protect the hands from injuries caused by handling sharp or jagged objects, wood, or similar hazard-producing materials. These gloves are usually made of cloth material (such as cotton flannel) with chrome leather palms and fingers or synthetic coating. All-leather gloves are also acceptable. **NOTE:** When a supervisor is unable to find the appropriate glove in the Air Force inventory, functional managers and supervisors must use the proper Air Force channels to procure PPE from outside sources. Before purchasing gloves, or any protective clothing (outside Air Force sources) the supervisor will obtain documentation from the manufacturer which indicates that the equipment purchased meets the appropriate test standards for the hazards anticipated.

14.5.7.2. Selection of Gloves for Protection Against Chemical Hazards. Chemical protective gloves will be worn by personnel working in battery shops or where acids, alkalis, organic solvents, and other harmful chemicals are handled. (Consult the TO, the MSDS for each chemical used, and the local BEE for assistance in selecting the proper glove material.)

14.5.7.2.1. Toxic properties of the chemicals used must be determined and taken into consideration when selecting the proper protective gloves. Example: Some chemicals have the ability to cause local effects on the skin or pass through the skin and cause systemic effects.

14.5.7.2.2. A glove should be selected on the basis of the chemical component with the shortest breakthrough time, since it is possible for solvents to carry active ingredients through polymeric materials.

14.5.7.2.3. Chemical-resistant gloves can be used for most dry powders.

14.5.7.2.4. Employees must be able to remove gloves in such a manner as to prevent skin contamination.

14.5.7.2.5. It is important that contaminated PPE, which can not be decontaminated, is disposed of in a manner that protects employees from exposure to hazards. Make sure the disposal of contaminated PPE is consistent with applicable environmental regulations.

14.5.8. Electrical Worker’s Clothing and Equipment:

14.5.8.1. Insulated Protective Equipment. Personnel who work on energized high voltage circuits or power supply lines will wear electrical worker’s nonconductive rubber gloves (with leather outer gloves) as prescribed by TOs, manufacturer’s manuals, or other safety directives. Other insulating clothing and equipment, such as blankets, hoods, sleeves, matting, and line tools designed for the voltage levels to be encountered, will be used as required.

14.5.8.1.1. Insulating equipment shall be inspected for damage before each day's use and immediately following any incident that can reasonably be suspected of having caused damage. Insulating gloves shall be given an air test, along with the inspection.

14.5.8.1.2. Insulating equipment with any of the following defects may not be used:

14.5.8.1.2.1. A hole, tear, puncture, or cut;

14.5.8.1.2.2. Ozone cutting or checking;

14.5.8.1.2.3. An embedded foreign object;

14.5.8.1.2.4. Any swelling, softening, hardening, or sticky texture or loss of elasticity; or

14.5.8.1.2.5. Any other defect that damages the insulating properties.

14.5.8.1.3. Insulating equipment found to have defects that might affect its insulating properties shall be removed from service and returned for testing.

14.5.8.1.4. Insulating equipment shall be cleaned as needed to remove foreign substances.

14.5.8.1.5. Insulating equipment shall be stored in such a location and in such a manner as to protect it from light, temperature extremes, excessive humidity, ozone, and other injurious substances and conditions.

14.5.8.2. Electrical Equipment:

14.5.8.2.1. Each item will be clearly marked with proper Class number (refer to **Table 14.1.**), i.e.:

Class 0

Class 1

Class 2

Class 3

Class 4

Type I — for Non-Ozone-resistant equipment other than matting.

Type II — for Ozone-resistant equipment other than matting.

NOTE: Other information such as manufacturer identification and size may also be displayed on the equipment if desired.

14.5.8.2.2. Electrical protective equipment shall be maintained in a safe, reliable condition.

14.5.8.2.3. Maximum use voltages shall conform to those listed in **Table 14.1.**

14.5.9. Selection of Gloves for Protection Against Electrical Shock or Burn. Electrical worker's gloves are designed to insulate workers from shock, burns, and other electrical hazards. These gloves will NOT be the only protection provided and will never be used with voltages higher than the insulation rating of the gloves. Workers will ensure that gloves being used have been tested according to this standard.

14.5.9.1. Rubber protective gloves shall never be used without leather outer protective gloves, also referred to as leather gauntlets.

14.5.9.2. Only seamless rubber insulating gloves will be used.

14.5.9.3. Gloves shall be marked clearly and permanently with the name of the manufacturer or supplier, type, size, voltage class, and class color. This marking is found on the cuff portion of the glove.

14.5.9.4. Markings will be nonconducting and not impair the insulating qualities of the equipment.

14.5.9.5. Type II material is equipment other than matting which has been designed to be ozone-resistant. Material used for Type II insulating equipment shall be capable of withstanding an ozone test, with no visible effects. The ozone test shall reliably indicate that the material will resist ozone exposure in actual use. Any visible signs of ozone deterioration of the material, such

as checking, cracking, breaks, or pitting, is evidence of failure to meet the requirements for ozone-resistant material.

14.5.9.6. Gloves shall be capable of withstanding the alternating current (AC) prooftest voltage specified in **Table 14.2.** after a 16-hour water soak.

14.5.9.7. Procedure for testing gloves:

14.5.9.7.1. Glove (right side out) shall be filled with tap water and immersed in water to a depth that is according to instructions in **Table 14.2.**

14.5.9.7.2. Water shall be added to or removed from the glove, as necessary, so that the water level is the same inside and outside the glove.

14.5.9.7.3. When the AC test is used on gloves, the 60-hertz prooftest current may not exceed the values specified in **Table 14.2.** at any time during the test.

14.5.9.7.4. After the 16-hour water soak, the 60-hertz prooftest current may exceed the values given in **Table 14.2.** by not more than 2 milliamperes.

NOTE: If equipment has been subjected to a minimum breakdown, a voltage test may not be used for electrical protection.

14.5.9.7.5. Rubber protective gloves shall be visually inspected prior to each use. They will be placed in glove bags and stored in a bin or locker away from tools and materials to prevent damage.

14.5.9.8. Surface irregularities that may be present on all rubber goods because of imperfections on forms or molds or because of inherent difficulties in the manufacturing process and that may appear as indentations, protuberances, or imbedded foreign material are acceptable under the following conditions:

14.5.9.8.1. The indentation or protuberance blends into a smooth slope when the material is stretched.

14.5.9.8.2. Foreign material remains in place when the insulating material is folded and stretches with the insulating material surrounding it.

14.5.9.8.3. Rubber insulating gloves in storage will be dielectric tested every 12 months. Rubber gloves that are removed from storage and issued to a worker are in active use and shall be tested before first issue and every 6 months thereafter.

14.5.9.8.4. Rubber insulating sleeves will be dielectric tested before first issue and every 12 months thereafter.

14.5.9.8.5. The supervisor will stamp the dates of the dielectric test and issue date on the gloves. The supervisor shall maintain a record of all electrical equipment test dates and establish procedures to control its issue, inspection, testing, and use.

14.5.9.8.6. Rubber insulating equipment meeting the following national consensus standards are deemed to be in compliance with this standard.

14.5.9.8.6.1. ASTM D120-95, *Specification for Rubber Insulating Gloves*.

14.5.9.8.6.2. ASTM D178-98 (or D178-88), *Specification for Rubber Insulating Matting.*

14.5.9.8.6.3. ASTM D1051-95, *Specification for Rubber Insulating Sleeves*. **NOTE:** These standards contain specifications for conducting AC and direct current (DC) prooftests, breakdown test, water soak procedure, and the ozone test mentioned in this standard.

14.5.10. Foot and Leg Protection—Safety Shoes, Toe Caps, Leggings, etc. Protective footwear shall be provided and worn when there is a reasonable possibility of sustaining foot injuries due to heavy or sharp objects and electrical and (or) static electricity considerations. For protection of feet and legs from falling or rolling objects, sharp objects, molten metal, hot surfaces, and wet slippery surfaces, workers will use appropriate footguards, safety shoes, or boots and leggings. Leggings protect the lower leg and feet from molten metal or welding sparks. Safety snaps permit their rapid removal.

14.5.10.1. Supervisors will identify those areas, operations, or occupations which may require protective leg or footwear. All individually issued safety footwear used in Air Force daily operations will meet the requirements of applicable ANSI Standard Z41, *Personal Protection-Protective Footwear*.

14.5.10.2. Safety-toe shoes meeting ANSI Standard Z41 are clearly identified by the manufacturer with a label or stamp placed on the inside surface of the tongue or quarter lining. There are three classes of safety-toe shoes identified in ANSI Standard Z41; only class 75 shoes are approved for the Air Force. Currently most safety-toe shoes for women meet only class 30 standards. Until class 75 shoes for women are available, the class 30 shoe can be used (OSHA 29 CFR 1910.136, *Foot Protection*). Safety shoes will be sturdy and have an impact-resistant toe. In shoes, metal insoles protect against puncture wounds. Additional protection, such as metatarsal guards, may be found necessary in some types of footwear. Nonskid shoes will be worn where floors may be wet or slippery. Electrical hazard shoes are not designed to be a replacement for electrically rated matting in high voltage situations. These shoes are designed to be used when working on low voltage circuits and, as a secondary means of protection. (OSHA 29 CFR 1910.136)

NOTE: When exposed to cold temperatures and foot crushing hazards; if cold weather footwear which also provides crushing protection is not available, personnel will be issued footwear which protects against the possibility of frostbite.

14.5.11. Chemical Protective Clothing. The purpose of chemical protective clothing and equipment is to shield or isolate individuals from chemical, physical, and biological hazards that may be encountered during hazardous materials operations. Many chemicals pose invisible hazards and offer no warning properties. It is important for employees to realize that no single protective clothing item can protect against all hazards. Clothing should be used in conjunction with other protective methods such as engineering or administrative controls to limit chemical contact.

14.5.11.1. Chemical Protective Clothing Selection. Supervisors will select chemical protective clothing based on the performance characteristics of the chemical protective clothing relative to the tasks to be performed, conditions present, duration of use, and potential hazards identified. Supervisors must first review TO requirements and MSDS guidance, then verify the proper selection with the installation BEE before original issue. Subsequent issues of chemical protective clothing will not require referral services of the installation BEE if circumstances and chemicals involved have not changed.

14.5.11.2. Ensemble Selection Factors:

14.5.11.2.1. Hazard Consideration. Chemicals present a variety of hazards such as toxicity, corrosiveness, flammability, reactivity, and oxygen deficiency. Depending on the chemicals present, any combination of hazards may be present.

14.5.11.2.2. Requirements. Selection of the proper types of chemical protective clothing or equipment will depend on requirements from TOs, MSDSs, and suggested manufacturer's recommendations.

14.5.11.2.2.1. Check with the installation BEE before purchasing chemical protective clothing or equipment.

14.5.11.2.2.2. Some chemicals require PPE to be made out of specific materials. Beware of recommendations referring to generic names such as "latex gloves" or "rubber aprons".

14.5.11.2.2.3. Ensure that PPE is made from specific materials which are designed to protect against specific chemicals for the duration of exposure.

NOTE: For a given type of material, chemical resistance can vary from brand to brand. Generally the thicker the material, the longer it will take for the chemical to permeate it.

14.5.11.3. Chemical Protective Clothing Limitations--Breakthrough Time (see definition, **Attachment 1**). Keep in mind that chemicals allowed to remain on protective clothing or equipment can diffuse through the material, even if it is in storage. Chemical protective clothing that is reused must be cleaned before storage. In some cases it may be more cost effective to select chemical protective clothing with a relatively short breakthrough time and discard it after use.

14.5.11.3.1. Duration of Exposure. Maximum duration of exposure to a chemical should be considered when selecting chemical protective clothing. For example, the material needed to protect against an occasional splash may have a relatively short breakthrough time (breakthrough time should never be less than 1 hour).

14.5.11.3.2. Performance Characteristics:

14.5.11.3.2.1. Resistance to abrasions, cuts, heat, ozone, and punctures or tears may need to be considered to maintain the integrity of the material.

14.5.11.3.2.2. Flexibility may be an important factor to look at if inflexible equipment interferes with the worker's ability to successfully accomplish their task.

14.5.11.4. Training:

14.5.11.4.1. Supervisors must ensure employees have received the proper training to protect themselves against hazards created by the wear of chemical protective clothing. Heat stress, physical and psychological stress, impaired vision, mobility, and communications can significantly increase the risk of injury. The approach in selecting personal protective clothing must encompass an "ensemble" of clothing and equipment. This clothing and equipment should easily be integrated to provide both an appropriate level of protection and allow workers to carry out assigned duties involving the chemicals. Over-protection as well as under-protection can be hazardous and should be avoided. (Refer to paragraph **1.4.** for training documentation).

14.5.11.4.2. Supervisors will ensure their employees are properly trained on pre-use inspection, maintenance, cleaning, and storage of chemical protective clothing and equipment.

14.5.11.4.2.1. Pre-Use Inspection. Typical inspection procedures for chemical protective clothing may include checks for imperfect seams and seals and discrepancies in the material coating (such as: pinholes, rips, and tears, surface cracks, malfunctioning closures, and signs of deterioration). Pinholes may be detected by holding the material up to a light in a dark room. Gloves can be checked by inflating the glove and checking to see if the glove holds the pressure or emits bubbles under water. Manufacturer's manuals will be consulted for recommendation for specific points of inspection.

14.5.11.4.2.2. Cleaning. Chemical protective clothing that is reused will be cleaned before storage. Residual chemical on the chemical protective clothing can permeate the material during storage and reduce the useful life of the chemical protective clothing. It can also contaminate the inside of the chemical protective clothing.

14.5.11.4.2.3. Disposal. The supervisor will ensure that chemical protective clothing which is classified as hazardous waste is discarded, using the correct procedures.

14.5.11.4.2.4. Respiratory Training Documentation. Refer to paragraph **14.4.1.**

14.5.12. Knee Protection. Knee pads may be used by workers who are required to kneel while performing most of their work or by workers with known knee problems that could be compounded by working in a kneeled position.

14.5.13. Other:

14.5.13.1. Shop supervisors will ensure shop personnel use the protective clothing and equipment that will protect them from hazards of the work they perform. It is the responsibility of workers to keep their PPE in a clean, sanitary state of repair and use the equipment when required.

14.5.13.2. Workers will keep their hands and face clean, change clothes and wash contaminated skin when they are contaminated with solvents, lubricants, or fuels, and keep their hands and soiled objects out of their mouth. No food or drink will be brought into or consumed in areas exposed to toxic materials, chemicals, or industrial shop contaminants. After exposure to any contaminant, shop personnel will wash their hands before eating or smoking. Safe drinking water will be provided in or reasonably near all shops. Waste food from the lunch area will be kept in a receptacle that is tightly covered and kept clean. Restrooms, provided with hot and cold running water, will be kept clean and in a sanitary condition. Shop personnel required to wear protective clothing will be provided with change rooms equipped with clothing lockers having separate storage facilities for clean and soiled clothing. Clothing used daily and issued by the shop will be cleaned and stored in shop lockers or fenced areas within the building. Clothing and protective equipment will be inspected daily for satisfactory condition by using workers. In addition, supervisors or a designated employee will spot check equipment and clothing. (OSHA 29 CFR 1910.141, *Sanitation*.)

14.6. Specific Requirements:

14.6.1. Insulating matting shall be used near electrical apparatus or circuits in high voltage maintenance areas as an additional safety measure to protect personnel. Insulating matting is for protection against accidental shock only and shall not be depended upon for protection when handling energized wires and circuits. TOs 00-25-232, *Control and Use of Insulating Matting for High-Voltage Application*, and 00-25-234, *General Shop Practice Requirements for Repair Electrical Equipment*, and Military Manual (Mil DTL) 15562G, *Matting or Sheet, Floor Covering, Insulating for High Voltage*

Application, provide information and instructions for the control, use, and marking of insulating matting. Approved electrical insulating matting is permanently marked according to Mil DTL 15562G.

14.6.2. Upon request, the supervisor, with the assistance of the installation ground safety staff, will inspect areas where electrical facilities are located and determine whether insulating matting is required for worker protection. Typical examples of high voltage are areas where: insulating matting is required: potential shock hazards exist and additional resistance is required; floor resistance is lowered due to dampness; high voltages (above 600 volts) may be encountered, such as high voltage consoles; and areas with electrical repair or test benches (shops), motors, or equipment and control panels.

14.6.3. Cleaning will be accomplished as often as necessary to prevent contamination, utilizing domestic cleaners such as carpet cleaner or any other locally approved cleaner required for special situations.

14.6.4. Insulating matting will be replaced when worn to one-half its original thickness or the manufacturer's suggested replacement requirements. **NOTE:** Shoes with nails should not be worn on insulating matting.

14.6.5. Insulating matting on floors in front of and around electrical workbenches, high voltage cabinets, switch panels, etc., will be of one continuous length or strip. Where, possible, the matting will continue for 24 inches beyond the end of the equipment. Overlapping at corners is not required if it produces a tripping hazard. If more than one run or strip of matting is required, the activity supervisor will determine the amount needed.

14.6.6. Insulating matting will be seamless and markings will be nonconducting and not impair the insulating qualities of the equipment.

14.6.7. Matting will be capable of withstanding the AC prooftest voltage specified in **Table 14.1.** or the DC prooftest voltage specified in **Table 14.3.**

14.6.8. The voltage test will be applied continuously for 3 minutes for equipment other than matting and applied continuously for 1 minute on matting.

14.6.9. Insulating matting shall not be used for nonskid applications such as walkways, hall runners, in front of workbenches (non-electric), or on work-and test-benches, etc. For these applications, general purpose matting shall be used. This is a low-cost matting and is satisfactory for use in areas where shock protection is not required. No certification for use of general purpose matting is required.

14.6.10. Light Reflective Products:

14.6.10.1. Light reflective and luminescent materials are particularly effective for reducing mishaps caused by poor visibility or darkness. Reflective coatings are available in the primary safety code colors so standard signs and markings can be made with these materials. Material must remain reflective when wet.

14.6.10.2. Personnel exposed to a traffic environment or flight line operations during hours of darkness or periods of reduced visibility will be provided and use reflective accessories or will use organizational clothing with sewn-on reflective tape (red or orange reflective colors provide better contrast in a snow or white environment). Security police operations are exempt from this requirement at the option of the local security police commanders in coordination with the installation

ground safety staff. Security Forces personnel directing traffic during reduced visibility or darkness will wear a reflective vest.

14.6.11. Heat Reflective and Protective Clothing. Radiant heat is a problem in operations such as heat treating of metals, foundry operations, and heating plants. Heat reflective qualities of clothing and other surfaces are considerably affected by color and surface characteristics. Polished metallic aluminum is an effective surface to reflect radiant heat. Clothing consisting of helmets, suits, gloves, and boots with this type surface are available and should be used when necessary, to prevent heat stress and physical injury. Frequent breaks and drinking plenty of water are critical for the prevention of heat-related injuries. **NOTE:** If metallic coating on heat reflective clothing is conductive, it will not be worn where there is the possibility of electrical shock.

14.6.12. Cold-Testing and Clothing. Protective clothing used in cold-testing or storage areas must be adequate to protect the workers from the hazards involved with the task being accomplished and cold temperatures. Supervisors will ensure that JSAs conducted for this type of operation include protection from the hazards involved with working in cold temperatures. Frostbite can be avoided by wearing approved protective clothing and taking frequent breaks to warm body extremities.

14.6.13. Personal Fall Arrest Systems **(**Safety Harnesses, Lanyards, Lifelines, and Straps): See **Chapter 13**.

Table 14.1. Rubber Insulating Equipment Voltage Requirements.

Class of Equipment	Maximum Use Voltage (1) AC rms	Retest (2) AC rms	Retest Voltage (2) DC avg.
0	1,000	5,000	20,000
1	7,500	10,000	40,000
2	17,000	20,000	50,000
3	26,500	30,000	60,000
4	36,000	40,000	70,000

NOTES:

1. The maximum use voltage is the AC voltage (rms) classification of the protective equipment that designates the maximum nomial design voltage of the energized system that may be safely worked. The nominal design voltage is equal to the phase-to-phase voltage on multiphase circuits. However, the phase-to-ground potential is considered to be the nominal design voltage:
   (a). If there is no multiphase exposure in a system area and if the voltage exposure is limited to the phase-to-ground potential, or
   (b). If the electrical equipment and devices are insulated or isolated or both so that the multiphase exposure on a grounded wye circuit is removed.
2. The prooftest voltage shall be applied continuously for at least 1 minute, but no more than 3 minutes.

Table 14.2. Alternating Current (AC) Prooftest Requirements.

		Maximum Proftest Current, mA (Gloves Only)			
Class of Equipment	Prooftest Voltage rms V	267-mm (10.5) Glove	356-mm (14-in) Glove	406-mm (16-in) Glove	457-mm (18-in) Glove
0	5,000	8	12	14	16
1	10,000	……..	14	16	18
2	20,000	……..	16	18	20
3	30,000	……..	18	20	22
4	40,000	……..	……	22	24

Table 14.3. Glove Test – Water (NOTE: 1, 2).

	AC Prooftest		DC Prooftest	
Class of Glove	mm.	in.	mm.	in.
0	38	1.5	38	1.5
1	38	1.5	51	2.0
2	64	2.5	76	3.0
3	89	3.5	102	4.0
4	127	5.0	153	6.0

NOTES:

1. The water level is given as the clearance from the cuff of the glove to the water line, with a tolerance of + of – 13mm. (+ or – 0.5 in.).
2. If atmospheric conditions make the specified clearances impractical, the clearances may be increased by a minimum of 25 mm. (1 in.).

Figure 14.1. Personal Protective Equipment (PPE) Checklist.

F14.1. This is not an all inclusive checklist. It, like all the checklists in this standard, simply highlights some critical items in the corresponding chapters. Other requirements exist that are not included in the checklist. Where appropriate, MAJCOMs, FOAs DRUs, local safety staffs, and supervisors will add to this checklist to include command or individual location or shop-unique requirements or situations.

F14.1.1. Has the supervisor conducted and documented a job safety analysis (JSA) to identify hazards and PPE required for a particular task? (Reference **14.2.2.**)

F14.2. When PPE is required, is the identified or potential hazard matched to the proper protective devices? (Reference **14.2.3.**)

F14.3. Has OH-PPE been certified by the BEE? (Reference **14.4.7.**)

F14.4. Do supervisors ensure that PPE is provided, used, and maintained in a sanitary serviceable condition? (Reference **14.4.9.**)

F14.5. Do supervisors maintain discipline with regard to personnel wearing properly fitted PPE? (Reference **14.4.9.**)

F14.6. Are supervisors advising their workers that it is mandatory for them to comply with PPE requirements on- and off-duty? (Reference **14.4.10.2.**).

F14.7. Have workers who wear contact lenses notified their supervisors? This information is vital to emergency medical personnel who may need to remove lens from the individual's eye. (Reference **14.4.10.4.**)

F14.8. Has the worker notified their supervisor about any known medical condition or illness they may have that could affect their ability to perform a hazardous task or operation? (Reference **14.4.10.5.**)

F14.9. Are employees provided the appropriate eye or face protection when exposed to hazards from flying particles, molten metal, liquid chemicals, corrosives, caustics, chemical gases, vapors, or potentially injurious light radiation? (Reference **14.5.2.**)

F14.10. Is there an established policy which requires management, supervisors, and visitors to wear the appropriate PPE while they are within a hazardous area? (Reference **14.5.2.**)

F14.11. Are personnel working in areas where there is a potential for injury from falling or flying objects, bumping head against a fixed object, or electrical shock or burns provided protective helmets? (Reference **14.5.3.**)

F14.12. Do protective helmets have the manufacturer's name, ANSI Z89.1, and the class (Type I, Type II, G, E, or C) identified inside the shell? (Reference **14.5.3.1.**)

F14.13. Do employees who work around chains, belts, rotating devices, suction devices, blowers, etc., cover their long hair to prevent it from being caught in machinery? (Reference **14.5.3.4.1.**).

F14.14. Exposure to high noise levels can cause hearing loss or impairment, in addition to physical and psychological stress. Is specifically designed hearing protection (depending on the type of noise encountered and the auditory condition of the employee) provided for employees in areas where required by AFOSH Standard 48-19, *Hazardous Noise Program?* (Reference **14.5.4.**).

F14.15. When an operation is suspected of generating hazardous dusts or air-borne contaminants, is the local BEE contacted for advice on the proper respirator protection to use, prior to exposing personnel to the potentially hazardous atmosphere? (Reference **14.5.5.**)

F14.16. When an employee's hands or arms are exposed to hazards such as those from skin absorption of harmful substances, severe cuts, lacerations, abrasions, punctures, chemical burns, or harmful temperature extremes, is the appropriate hand or arm protection provided? (Reference **14.5.7.**)

F14.17. Are chemical protective gloves worn by personnel working where acids, alkalis, organic solvents, and other harmful chemicals are handled? (Consult the proper MSDS chemical protective requirements for the particular chemical which employees are being exposed.) (Reference **14.5.7.2.**).

F14.18. Are employees able to remove rubber protective gloves in such a manner as to prevent skin contamination? (Reference **14.5.7.2.4.**)

F14.19. Is contaminated PPE, which can not be decontaminated, disposed of in a manner that protects employees from exposure to hazards? (Reference **14.5.7.2.5.**)

F14.20. Is protective footwear provided and worn when there is a reasonable possibility of sustaining foot injuries? (Reference **14.5.10.**)

F14.21. Are other protective methods such as engineering or administrative controls used to limit the possibility of employees coming in contact with hazardous chemicals? (Reference **14.5.11.**)

F14.22. Do supervisors select chemical protective clothing based on the performance characteristics of the chemical protective clothing relative to the tasks to be performed, conditions present, duration of use, and potential hazards identified? (Reference **14.5.11.1.**)

F14.23. Do supervisors first review MSDS requirements, then verify the proper selection of chemical protective clothing with the installation BEE before original issue? (Reference **14.5.11.1.**)

F14.24. Are supervisors aware that subsequent issues of chemical protective clothing do not require referral services of the installation BEE if circumstances and chemicals involved have not changed? (Reference **14.5.11.1.**)

F14.25. Are personnel exposed to vehicle or aircraft traffic during hours of darkness or periods of reduced visibility provided reflective accessories? (Security police operations are exempt from this requirement at the option of the local security police commanders in coordination with the installation ground safety staff.) (Reference **14.6.10.1.**)

F14.26. Do supervisors provide frequent breaks and ensure employees drink plenty of water when employees are exposed to work environments where heat is a problem? (Reference **14.6.11.**)

F14.27. Do supervisors ensure that the proper cold weather clothing been provided for working in cold temperatures? (Reference **14.5.10.2.**)

F14.28. When working in cold temperatures, are frequent breaks allowed so workers may warm body extremities? (Reference **14.6.12.**)

F14.29. Do workers promptly remove contaminated clothing and thoroughly wash affected skin? (Reference **14.5.13.2.**)

Chapter 15

GROUNDS, LAWN CARE AND MOWING SAFETY

15.1. General Information. All personnel shall observe all safety precautions in this chapter and those recommended by the manufacturers of the equipment. Always read the owner's manual before operating the equipment. Refer to OSHA 29 CFR 1910.243. *Guarding of Portable Powered Tools*, American National Institute (ANSI) B71.1, *Safety Specifications for Power Lawn Mowers*, further guidance for operation and operator maintenance of powered lawn equipment.

15.1.1. Landscape and Grounds Maintenance:

15.1.1.1. Portable Powered Equipment. The various types of portable powered landscaping equipment usually have high-speed cutting edges, produce high noise levels, and wedge in the material they are cutting.

15.1.1.2. Gasoline powered augers should be inspected twice a day when being used. Shear pins, cutting bits, fuel systems, and shutoff switches should be in good working condition. A foreign object such as a bolt should NEVER be used as a substitute for a shear pin. The engine should be operated at three-quarters throttle and be shut off whenever the cutting bit becomes wedged. Operators will be sure the engine is cool before refueling and started no less than 10 feet from the refueling point. The cutting bit will be kept away from the legs and feet. Safety boots and eye and hearing protection will be worn at all times during operation. Operators will NOT wear loose fitting clothing. One operator should NEVER try to operate an auger designed for two workers.

15.1.1.3. Chain saws are covered in **Chapter 12**.

15.1.1.4. Electric hedge clippers will be inspected, cleaned, oiled, and sharpened as required when in use. A grounded power cord shall be used if the tool is not double insulated. The cord will be inspected before use and daily for condition. The cord will be kept away from the cutting surface and out from under the feet of the operator. The cutting teeth of the clipper will not be pointed toward the body of the operator. The unit will be shut off and unplugged while moving from job to job. Gloves will be worn when operating hedge clippers. No electric power tool will be operated in rain, sprinklers, or any kind of precipitation.

15.1.2. Tire Removal and Mounting. Workers will use wheel jacks when mounting or removing large single or dual wheels. Tire or wheel chocks will be used, as required. Multi-piece or split-rim tires will be gauged prior to installation. Wheels having more than 80 percent of the recommended pressure may be inflated while on the vehicle if remote control inflation devices are used and no one is in the trajectory. Tires with less than 80 percent of the recommended pressure will be removed from the vehicle and inflated in a cage. Tires that have been driven under inflated at 80 percent or less of their recommended pressure will be deflated by removing the valve core before the wheel is removed. This same precaution applies when mounting or removing these type wheels. Repair of split rim or lock ring tire assemblies will be accomplished by qualified vehicle maintenance personnel with tire inflation accomplished inside a safety cage designed for that purpose. Split rim or lock ring tires can seriously injure or kill workers when the rings explode outward during attempted repairs or inflation outside a safety cage. Any area where the repair of split rim or lock ring tires takes place will have an OSHA Rim Chart posted in a conspicuous location. (OSHA 29 CFR 1910.177, *Servicing Multi-Piece and Single Piece Rim Wheels*.)

15.1.2.1. Mowing. Maintenance of installation grounds involves the use of various sizes and types of lawnmowers. The two basic industrial types are reel and rotating that may be pushed, self-propelled, ridden, or towed. The most significant dangers are being struck by the blade or a foreign object thrown by the high speed blades and noise-induced hearing loss.

NOTES:

1. All personnel shall observe the safety precautions in this standard and those recommended by the manufacturer of the equipment. Always read the owner's manual before operating the equipment.
2. Ensure electric mowers, trimmers, and attached extension cords are effectively grounded. However, listed or labeled portable tools protected by an approved system of double insulation, or its equivalent, need not be grounded.
3. Never use electric mowers and grass trimmers while it is raining or the grass is wet, excluding light dew.

15.1.3. Foot Protection. Workers will wear safety-toe shoes or metal toe-guards when operating powered push mowers or edgers. When using mowers equipped with an installed rear drag plate or edgers with nylon filament line cutters (and requirements of paragraph **15.1.2.1.** are followed) the use of safety-toe shoes or metal toe-guards is optional. In all instances, workers operating this equipment will wear shoes of sturdy construction. Open-toed sandals, tennis shoes constructed of cloth or canvas, etc., are not appropriate for wear during mowing tasks.

15.1.3.1. Eye Protection. Use suitable eye protection (safety glasses, goggles, face shields, or a combination) when operating powered edgers or weed eaters. When mower operators are exposed to flying rocks, dirt, or other hazards, they will wear appropriate eye protection.

15.1.3.2. Hearing Protection. If hazardous noise levels are produced by the equipment being operated, workers will wear hearing protection. Coordinate with the installation

BE staff for guidance. If equipment is identified as producing hazardous noise levels, place a decal or stenciled warning in view of the operator stating: "WARNING—THIS MACHINE CREATES HAZARDOUS NOISE LEVELS. EAR PLUGS OR MUFFS SHALL BE WORN." See AFOSH Standard 48-19 for additional guidance.

15.1.3.3. Other. Workers may wear gloves when using walk-behind mowers. In addition, they should wear bump caps when using a riding or towed mower around tall brush and low hanging tree limbs. Guard all mower discharge chutes with shields or approved grass catchers to deflect or stop foreign objects thrown and to prevent the operator's inadvertent contact with the blade during operation. Place a readable safety message indicating "CAUTION ," "WARNING ," or "DANGER—DO NOT USE WITHOUT GUARD OR GRASS CATCHER IN PLACE " on or near the mower's discharge opening. **NOTE:** Push and self-propelled mowers manufactured according to ANSI B71.1, *Lawn Mowers, Lawn and Garden Tractors, and Lawn Tractors*, are equipped with a rear protective guard.

15.1.4. Operating Practices Applicable to Powered Push Mowers:

15.1.4.1. Prior to mowing, operators will clear the area to be mowed of all people and inspect for foreign objects, raised sprinkler heads, holes, soft ground, obstructions or any other condition that has the potential to impact the safety of the operation.

15.1.4.2. Personnel operating this equipment should never pull the mower backwards while the engine is running because the safety guard on the back may cause the mower to lift off the ground subjecting the operator to serious injury.

15.1.4.3. Always mow in a horizontal direction across the face of a steep slope, e.g., hills or banks exceeding a 30-degree angle, and keep firm footing at all times.

15.1.4.4. Stay clear of the front of self-propelled mowers during and after starting. Control the mower by hand pressure on the handle, not by foot pressure on the housing.

15.1.4.5. Do not attempt to clean grass from the chute when the mower is running. Disconnect the spark plug or if electrical—the power—when cleaning, repairing, or inspecting the mower.

15.1.4.6. Do not leave the mower running unattended.

15.1.4.7. Set mower height no lower than recommended by the local Cooperative Extension Agent responsible for turf maintenance information.

15.1.4.8. Powered Mowers—Walk-Behind, Riding-Rotary, Converted Sulky, and Reel Power Lawnmowers. These mowers shall meet the design specifications **NOTE:** in OSHA Standard 29 CFR 1910.243, *Guarding of Portable Powered Tools*. (For example: "Deadman controls shall automatically interrupt power to a drive when the operator's actuating force is removed, and may operate in any direction to disengage the drive.")

15.1.4.9. Follow manufacturer's requirements during vertical or horizontal mowing of grades with riding or towed mowers.

15.1.4.10. While operating gang reel mowers on a slope, raise the upper reels as a counterbalance to prevent the mower from sliding or turning over. Ensure special equipment designed for steep hills or grades is available or workers can cut by hand using manual tools.

15.1.4.11. Edgers. Check to make sure the guard is in place. Never use the edger when people are in line with the blade. Use proper PPE. Always disconnect power when inspecting or repairing the edger.

15.1.5. General Rules for Maintaining Lawn Care Equipment:

15.1.5.1. Always refuel with the engine off and allow the engine to cool first. Do not permit smoking in the area. Refuel mowers prior to use instead of refueling before storing inside a building. Complete refueling outside at least 10 feet away from the building or any open flame source.

15.1.5.2. Use boards or ramps to load and unload mowers from vehicles. Ensure the engine is off and the spark plug wire is disconnected. Always shut off the fuel supply line when parking mowers inside or outside at the end of the duty day. As storage space permits, leave 1- to 3-feet separation space between parked gasoline-operated riding mowers.

15.1.5.3. Clean mowers or perform other maintenance on mowers only after turning the engine off and disconnecting the spark plug wire.

15.1.5.4. Use manufacturer's guidelines for operation and use of mowers.

15.1.6. Batteries:

15.1.6.1. Protective clothing will be used when servicing batteries. As minimum, safety-toe shoes, suitable eye and face protection, a rubber apron, and rubber gloves will be worn.

15.1.6.2. Personnel will use battery straps and PPE when lifting and carrying batteries. Where straps cannot be used, workers will practice correct lifting procedures to prevent strains from improper lifting. Batteries that cannot be carried with straps will be transported with carts or other material handling equipment.

15.1.6.3. Nickel-cadmium and unsealed lead-acid batteries will be separated to keep the lead-acid fumes away from the nickel-cadmium batteries.

15.1.6.4. Tools or metal parts will not be laid on a battery or stored where they may fall on a battery.

15.1.6.5. Workers will not wear rings, watches, bracelets, or other jewelry when working with batteries. Metal eyeglasses will be secured by a band or cord.

15.1.6.6. Battery charging will be done in specifically designated areas. The installation Bioenvironmental office will be contacted to evaluate the ventilation system for these designated areas. Where batteries are serviced, methods will be provided for flushing and neutralizing spilled electrolyte. Adequate ventilation will be provided to prevent hydrogen gas buildup (unsealed lead-acid batteries) and an ample supply soda ash will be available for quick absorption of the work area if acid is splashed or spilled. Personnel assigned to work with batteries will be instructed in emergency procedures such as coping with electrolyte spills. Where required, a serviceable emergency eyewash will be present in the shop area (refer to **Chapter 19**, Emergency Shower and Eyewash Units).

15.1.7. Tractor Operations. There are regulatory OSHA standards covering agricultural tractors. While limited in scope, these standards do contain some provisions applicable to tractors used in landscaping operations. Regulatory OSHA requirements from OSHA 29 CFR 1926.1002, *Protective Frames (ROPS) Test Procedures and Performance Requirements for Wheel-Type Agricultural and Industrial Tractors Used in Construction*, are covered in paragraphs **15.1.7.1.** and **15.1.7.2.**

15.1.7.1. Roll-over protective structures (ROPS) are required on tractors used for landscape maintenance. Seat belts shall be installed on all ROPS-equipped tractors and used whenever the vehicle is in motion.

15.1.7.2. Commercially purchased ROPS will satisfactorily pass the field upset tests (side and rear) specified in OSHA 29 CFR 1926.1002. A label indicating this is permanently attached by the manufacturer to the ROPS.

15.1.7.3. When pulling a load, operators will hitch only to the draw bar. The draw bar hitch will be kept at least 13 inches, but less than 17 inches, off the ground.

15.1.7.4. When moving a front load, the load will be kept low to the ground and the rear wheels as level as possible.

15.1.7.5. Operators will avoid holes and obstacles; both on the ground and overhead. Speed will be reduced with heavy loads when vision is limited or when operating on rough terrain.

15.1.7.6. When stuck, operators will try carefully to back out. Increasing engine speed or fastening a post to the rear wheels greatly increases the chances of tipping over backward; therefore, these methods will not be used. Operators will get help if needed.

15.1.7.7. When traveling on highways, operators will abide by local traffic rules. They will avoid travel during heavy traffic periods and check brakes for equal application for highway use. The

lighting and markings required by local state vehicle codes will be used. Slow-moving vehicle emblems will be used.

15.1.7.8. Grass will not be mowed with a tractor on slopes greater than a 4-inch rise or drop per foot of travel. Lower gears will be used when going down hill and the wheels will be allowed to control the tractor speed.

15.1.7.9. When using a sickle-bar mower, the sickle-bar blades will not be positioned downhill. They will be positioned on the upper side of the slope so the pull of gravity will not cause the tractor to turn over.

15.1.7.10. The engine will be shut off before the operator dismounts from the tractor or makes adjustments to either the tractor or towed equipment.

15.1.7.11. Riders will not be allowed on tractors, the draw bar, or towed equipment, except where the equipment is specifically designed to allow riders or passengers.

15.1.7.12. Fenders are guards for the worker's protection. Fenders will be kept in place at all times.

15.1.7.13. Tractors will only be left on an incline after the engine has been turned off, gear shift has been placed in park position (or the lowest gear if standard transmission), and the wheels have been braked and blocked. Where possible, tractors will be parked on level ground.

15.1.7.14. The power take-off guard will always be in place.

15.1.7.15. An operator will dismount or mount a tractor only when it is stopped. The steps and platform will be kept clean of debris.

15.1.7.16. Hearing protection and safety-toe shoes will be worn by the operator, when required. When operating in an overhead hazard area, hard hats will be worn. The installation BEE will be consulted to determine the need for respiratory protection.

15.1.8. Maintenance of Irrigation Systems:

15.1.8.1. Gases, low oxygen levels, high water levels, and in some cases, pressure are some hazards that exist in irrigation pits. Before entering an irrigation pit, oxygen and combustible gas levels shall be tested. Potential cracks, leaks, and weak pipes may be discovered. Upon finding any of these conditions, the pit will be ventilated and the worn or broken parts replaced before use of the pit is permitted. Before commencing repair work, the worker will ensure the water and electrical power have been turned off.

15.1.8.2. Only qualified electricians will work on electrical systems.

15.1.8.3. Transformers and other electrical equipment will be protected in waterproof boxes. Timing mechanisms will be mounted in a locked box.

15.1.8.4. Safety glasses or goggles and safety-toe shoes or boots will be worn during maintenance operations. Orange reflective safety vests will be worn when working within

15 feet of a roadway or parking lot. The safety vest should contain at least 30 square inches of reflective material. When working on or at the edge of a roadway, cones or barricades with lights and traffic warning signs will be used.

15.1.9. Tree Maintenance:

15.1.9.1. A full-time professional tree trimmer may perform scheduled tree care operations on an installation. Routine, unscheduled, and emergency conditions will normally require tree care maintenance throughout the year. Only trained and certified personnel will perform tree work, this includes work accomplished during adverse weather conditions. All workers will receive training in emergency rescue and life saving first aid techniques.

15.1.9.2. Two or more workers and an on-site job supervisor, fully qualified in tree maintenance, shall be assigned when tree maintenance involves climbing, working from a high reach lift, and while cutting down any tree other than small low trees that would pose no hazards to people, facilities, and utility lines. The area around trees that are being trimmed or cut and in the vicinity of operating chippers and stump grinders shall be effectively marked with cones, streamers, or barricades and controlled to warn personnel against the danger of entry.

15.1.9.3. Safety belts, saddles, ropes, D-rings, cutting tools, equipment, and all other related climbing gear will be inspected to ensure it is in safe condition prior to each use. Any equipment or climbing gear that is frayed, worn, broken, or defective shall be removed from service immediately. Each climber will have at least one lifeline and one handline, normally nylon, one-half inch by 125 feet. At least two, three-fourths of an inch polypropylene or equivalent lines (250 feet long each) will be provided for each crew. The nominal breaking strength of one-half inch ropes used for climbing shall not be less than 2,385 pounds. Climbing and safety ropes shall not be spliced for repair or added length. The ends of ropes will be wrapped to prevent fraying. A climbing rope shall always be used, even when work is performed from a ladder or lift device.

15.1.9.4. Workers involved in tree maintenance shall wear hard hats, gauntlet gloves, eye protection, and high-top safety boots when operating power saws or equipment. Hearing protection will be worn where hazardous noise level sources, such as power chain saws, chippers, and stump grinders, are operating. Ballistic nylon patch leg coverings should be used while operating power chain saws. Clothing for tree-climbing operations will be long sleeve shirts, pants, and clothing that is not baggy or loose.

15.1.9.5. Supervisors will complete (and have available for use) a job safety analysis and local operating instructions (OI) for both routine and emergency tree maintenance operations. Critical elements with serious potential to affect workers' safety, such as tree climbing, tree cutting and removal, trimming near electrical lines, use of chain saws, use of high-reach lifts, and use of cutters or chipper equipment, will be included.

15.1.9.6. Additional general safety requirements for tree care operations can be found in ANSI Z133.1, *Tree Care Operations—Pruning, Trimming, Repairing, Maintaining, and Removing Trees, and Cutting Brush—Safety Requirements*.

15.1.10. Flower Bed and Shrub Maintenance:

15.1.10.1. All flowers and shrubs will be planted and maintained at a height that will not interfere with the vision of vehicle operators. Workers will wear clothing and gloves that will protect their hands and arms from thorns and leaves which may cut or puncture the skin. Form fitting face piece devices may be required to prevent reactions to fine dust or pollen. Personnel will not work on flower or shrub beds within 24 hours after application of herbicides.

15.1.10.2. Rototillers and other machines used for preparing or maintaining beds will be fueled, lubed, and inspected daily to ensure safe operation. Workers will keep their feet and hands clear of moving parts and will not wear loose clothing. Shovels, hoes, and cultivators will be kept sharp,

used in moist soil, and placed where stepping on the cutting surface will not cause the handle to strike a person. Poisonous plants will not be planted.

15.1.10.3. Edging. Edging is done either by hand or with a machine. This standard primarily covers edging with a machine because of the hazards involved.

15.1.10.4. Be familiar with the machine before attempting to operate it. Keep the area clear of all persons and pets. Inspect the area and remove all foreign objects. Ensure the edging is not of a depth along walks to create a hazard for pedestrians.

15.1.10.5. Wear goggles, gloves, and safety-toe boots when operating a powered edger. Only gloves are required for using a manual edger. Wear the orange safety vest when edging requires the worker to be in the roadway or near the edge of a non-curb protected road.

15.1.10.6. Exercise caution to avoid slipping or falling on slopes.

15.1.10.7. Stop the engine and let it cool before adding fuel. Wipe up any spilled fuel before restarting the engine and replace fuel caps securely. Never store a fueled edger inside a facility where an open flame or an ignition source may be present.

15.1.10.8. Use a grounded three-wire cord for electrical driven edgers that are not double insulated.

15.1.10.9. Do not make adjustments when the engine is running.

15.1.10.10. Stay alert for hidden hazards. After striking a foreign object, stop the engine, remove the wire from the spark plug, and repair the damage before resuming operations. Remove the spark plug wire whenever it is necessary to put the hands close to parts that move.

15.1.11. Reseeding:

15.1.11.1. Seeders and rototillers have moving parts and create large amounts of dust. Safety protectors such as gloves, respirators, safety glasses or goggles, and safety-toe shoes or boots will be worn.

15.1.11.2. When working on slopes, the worker will have firm footing at all times. Orange safety vests will be worn when working next to any non-curb protected type of roadway.

15.1.12. Sodding:

15.1.12.1. Back strains, twisted ankles, and cuts can result from this type of operation. When sod is too bulky to allow two workers to handle, use a wheelbarrow or other equipment. Follow the lifting guidelines in paragraph **4.6.** of this standard. When cutting sod, cut away from yourself and do not make hacking motions.

15.1.12.2. Powered rollers and hand rollers are both used in sodding. Powered rollers are heavy and slip easily on slopes. When using a powered roller, avoid steep slopes so the roller does not tip or slide. Keep hands and feet away from moving parts. Push or pull hand rollers. When rolling sod on a slope, tie a rope to the handle, pull the roller up the hill, and let it roll down the hill by gravity. Do not walk on the slope while using a hand rollers.

15.1.13. Fertilizer Storage and Handling:

15.1.13.1. Fertilizer can become a very combustible material and may explode if stored at temperatures in excess of 130 degrees F. When fertilizers become wet and start to decompose, they give

off gas that will burn. Some fertilizers give off very toxic gases when burning. When fertilizer has started to burn, a large quantity of water should be applied to the burning surface to extinguish the flame and cool the rest of the fertilizer. The installation fire department shall be notified of any evidence of heating, smoking, combustion, or fire in the fertilizer. No more than 60 tons of fertilizer (mixtures containing 60 percents or more by weight or ammonium nitrate) will be stored in a location unless the location and storage facility have been approved by the installation fire department.

15.1.13.2. When spreading fertilizer, pellets will not be directed toward other people. If personnel enter the area, the spreader will be turned off. Fertilizer spreaders will be cleaned and lubricated daily. Safety glasses and gloves will be worn during fertilizing spreading operations.

15.1.13.3. Herbicides. The use of herbicides for weed control poses a significant potential safety and health hazard. Herbicides shall be applied per manufacturer's instructions and used only by certified personnel. Due to the absorption properties of herbicides, coveralls will be worn during application, in addition to safety goggles and appropriate respiratory protection, as determined by BEE.

Figure 15.1. Grounds, Lawn Care and Mowing Safety Checklist.

F15.1. This is not an all inclusive checklist. It, like all the checklists in this standard, simply highlights some critical items in the corresponding chapters. Other requirements exist that are not included in the checklist. Where appropriate, MAJCOMs, FOAs DRUs, local safety staffs, and supervisors will add to this checklist to include command or individual location or shop-unique requirements or situations.

F15.1.1. Portable Powered Equipment:

F15.1.2. Is required PPE designated and used during gasoline powered auger operations? (Paragraph **15.1.1.2.**)

F15.1.3. Is a grounded power cord used when electric hedge clippers are not double insulated? (Paragraph **15.1.1.4.**)

F15.1.4. Are electric power tools never operated in rain, sprinklers, or any kind of precipitation? (Paragraph **15.1.1.4.**)

F15.2. Tire Removal and Mounting. Are multi-piece or split-rim tires gauged prior to installation and is the “80-percent rule” followed for inflation purposes? (Paragraph **15.1.2.**)

F15.3. Mowing:

F15.3.1. Is required PPE designated and in use during the operation of lawnmowers? (Paragraph **15.1.2.1.** (1-3)

F15.3.2. Are extension cords used for electric mowers or trimmers grounded, unless the equipment is listed or labeled as being double insulated? (Paragraph **15.1.2.1.** [2])

F15.3.3. Are all mower discharge chutes guarded with shields or approved grass catchers and appropriate safety messages placed near the discharge opening? (Paragraph **15.1.3.3.**)

F15.3.4. Are operators aware of special precautions to be used when mowing hills or slopes? (Paragraph **15.1.4.3.**)

F15.4. Batteries:

F15.4.1. Is required PPE designated and used during battery servicing? (Paragraph **15.1.6.1.**)

F15.4.2. Are nickel-cadmium and unsealed lead-acid batteries stored and serviced in separate areas? (Paragraph **15.1.6.3.**)

F15.4.3. Are personnel prohibited from wearing rings, watches, bracelets or other metallic jewelry when working with batteries? (Paragraph **15.1.6.5.**)

F15.4.4. Is battery charging done in specifically designated areas that are equipped with adequate ventilation, water supply, and (where necessary) emergency eyewash and shower? (Paragraph **15.1.6.6.**)

F15.5. Tractor Operations:

F15.5.1. Are all tractors used for landscape maintenance equipped with rollover protection and seat belts? (Paragraph **15.1.7.1.**)

F15.5.2. Are tractor operators prohibited from mowing grass on slopes of greater than 4-inch rise or drop per foot of travel? (Paragraph **15.1.7.8.**)

F15.5.3. When using sickle-bar blades, do personnel always position them up hill? (Paragraph **15.1.7.9.**)

F15.5.4. Are riders prohibited on tractors, the draw bar, or towed equipment except when specifically designed for such use? (Paragraph **15.1.7.11.**)

F15.5.5. Are fenders in place on tractors? (Paragraph **15.1.7.12.**)

F15.5.6. Are tractors left on inclines braked and blocked? (Paragraph **15.1.7.12.**)

F15.5.7. Is the power take-off guard in place? (Paragraph **15.1.7.14.**)

F15.5.8. Is required PPE designated and used by operators? (Paragraph **15.1.7.16.**)

F15.6. Maintenance of Irrigation Systems:

F15.6.1. Are oxygen and combustible gas levels tested prior to entry to an irrigation pit? (Paragraph **15.1.8.1.**)

F15.6.2. Are transformers and other electrical equipment located in waterproof boxes? (Paragraph **15.1.8.3.**)

F15.6.3. Is required PPE designated and used? (Paragraph **15.1.8.4.**)

F15.6.4. Are orange reflective vests worn when working within 15 feet of a roadway or parking lot? (Paragraph **15.1.8.4.**)

F15.7. Tree Maintenance:

F15.7.1. Are a minimum of two workers and an on-site supervisor assigned during tree maintenance involving climbing, working from high reach lift, and cutting down trees other than small, low trees? (Paragraph **15.1.9.2.**)

F15.7.2. Are all safety related climbing devices inspected prior to use? (Paragraph **15.1.9.2.**)

F15.7.3. Does each climber have at least one lifeline and one handline? (Paragraph **15.1.9.3.**)

F15.7.4. Is required PPE designated and in use by all workers involved in tree maintenance? (Paragraph **15.1.9.4.**)

F15.7.5. Have supervisors performed a job safety analysis and developed local operating procedures for tree maintenance operations? (Paragraph **15.1.9.5.**)

F15.8. Flower Bed and Shrub Maintenance:

F15.8.1. Are flowers and shrubs maintained at a height that does not interfere with the vision of vehicle operators? (Paragraph **15.1.10.1.**)

F15.8.2. Are personnel restricted from working on flower or shrub beds within 24 hours of herbicide applications? (Paragraph **15.1.10.1.**)

F15.9. Edging:

F15.9.1. Is required PPE designated and used? (Paragraph **15.1.10.5.**)

F15.9.2. Is a grounded cord used when edgers are not double insulated? (Paragraph **15.1.10.8.**)

F15.10. Herbicides:

F15.10.1. Are herbicides applied per manufacturer's instructions and used only by certified personnel? (Paragraph **15.1.13.3.**)

F15.10.2. Is required PPE designated and used by personnel applying herbicides? (Paragraph **15.1.13.3.**)

Chapter 16

VEHICLE MOUNTED ELEVATING AND ROTATING WORK PLATFORMS, MANUALLY PROPELLED AND SELF-PROPELLED MOBILE WORK PLATFORMS, AND ROLLING (MOBILE) SCAFFOLDS (TOWERS)

16.1. General Information. This chapter applies to vehicle-mounted elevating and rotating platforms--including work platforms, fire fighting aerial devices, and aircraft maintenance equipment (used for elevating one or more workers for the purpose of performing work). It also applies to all manually-propelled and self-propelled mobile work platforms (including ladder stands) and rolling (mobile) scaffolds (towers). In some cases, the Air Force changes the design of commercially purchased mobile work platforms and scaffolds or builds this equipment; therefore, essential information, that applies to supporting loads and how scaffolds are to be built, is included in this standard (also refer to OSHA 29 Code of Federal Regulations [CFR] 1910.28, *Safety Requirements for Scaffolding*). Also, rules and requirements for design, construction, and use of mobile work platforms and scaffolds are given.

16.2. Hazards and Human Factors. The more common injuries are from electrocution, falls, and falling objects. The hazard of electrocution is increased when work platforms are used to provide access to energized high voltage circuits. Working from elevated platforms may also expose personnel to radio frequency (RF) radiation if they are within the line of sight of operating radar beams. Working at high levels affects people in different ways. Some workers may become dizzy or experience feelings of instability or vertigo. These effects may be compounded by moving the platform on which the person is standing. Human factors such as illness, fatigue, and physical defects may cause or contribute to mishaps. Unsafe personnel acts such as disregarding instructions, jumping from the platform, leaning too far out from the platform, and dropping or throwing tools and equipment from the elevated position also cause injuries. Property damage losses are usually caused by vehicle or equipment overloading or overextension of its designed capability.

16.3. General Requirements. The potential for injury, death, and property damage is decreased by proper design of platforms and scaffolds (tower), by thorough training of operators, thorough inspections, good equipment maintenance, and supervisory enforcement of known safe work practices. Therefore, it is necessary for supervisors to ensure workers are physically capable of work at high elevations. Workers, too, must be alert to signs or symptoms from co-workers such as decreased performance, change in attitude, and (or) physical changes, etc., which could result in mishaps.

16.4. Vehicle-Mounted Elevating and Rotating Work Platforms:

16.4.1. Procurement. Commercial aerial devices procured for Air Force fire fighting purposes will conform to National Fire Protection Association (NFPA) Standard 1901, *Aerial Ladder and Elevating Platform Fire Apparatus*. All other aerial devices procured from commercial sources will conform to ANSI Standard A92.2 *Vehicle Mounted Elevating and Rotating Aerial Devices*. Aerial devices constructed by the Air Force to satisfy Air Force mission requirements will conform to ANSI Standard A92.2.

16.4.2. Modifications. Modifications will conform to ANSI Standard A92.2 and OSHA 29 CFR 1910.67, *Vehicle-Mounted Elevating and Rotating Work Platforms*. The modifications authorized include: temporary removal of installed equipment not necessary for a particular mission or modifica-

tion to provide a new or improved capability. Any modification which removes or defeats any safety device or feature on an aerial device will not be permitted.

16.4.3. Clearances:

16.4.3.1. Electrical. When operating aerial lifts under, over, by, or near electric power lines, the following clearances will be maintained:

16.4.3.1.1. For lines rated at 50 kilovolts (kV) or less, the minimum clearance between the lines and any part of the aerial lift will be at least 10 feet (305 centimeter [cm]).

16.4.3.1.2. When the lines are rated in excess of 50 kV, the minimum clearance between the lines and any part of the aerial lift will be at least 10 feet (305 cm) plus 4 inches (10 cm) for each kilovolt in excess of 50 kV, or twice the length of the line insulator, but never less than 10 feet (305 cm).

16.4.3.2. Exceptions. The requirements set forth in paragraph 16.3.3. do not apply:

16.4.3.2.1. Where the work is performed from an aerial device insulated for the work and the work is performed by trained communications outside plant workers, line clearance tree-trimming employees, or exterior electric linemen; or,

16.4.3.2.2. Where the electric power transmission or distribution lines have been deenergized and visibly grounded at the point of work or where insulating barriers (which are not a part of or an attachment to the aerial lift) have been erected to prevent physical contact with the lines.

16.4.3.2.3. If insulating barriers are installed to prevent contact with the lines, and if the barriers are rated for the voltage of the lines being guarded and are not a part of or an attachment to the vehicle or its raised structure, the clearance may be reduced to a distance within the designed working dimensions of the insulating barrier. (See AFOSH Standard 91-50, *Communications Cable, Antenna and Communications-Electronic [C-E] Systems*.)

16.4.3.2.4. If the equipment is an aerial lift insulated for the voltage involved, and if the work is performed by a qualified person, the clearance (between the uninsulated portion of the aerial lift and the power line) may be reduced to the distance given in table 16.1. (See AFOSH Standard 91-50.)

16.4.3.2.5. If an aerial lift or equipment contacts an electrical conductor, the vehicle, equipment, and attachments will be considered energized. Personnel standing on the ground shall not contact any part unless using protective equipment rated for the voltage. (See AFOSH Standard 91-50.)

16.4.4. Proximity Warning Devices. Proximity warning devices are available and may be installed on aerial platforms. The use of such devices does not release the operator from assuring compliance with the clearances specified in paragraph 16.3.3.

16.4.5. Inspection and Test Procedures:

16.4.5.1. Aerial ladders will be inspected and tested annually or immediately following any activity when it is known, or suspected, the ladder may have been loaded beyond the manufacturer's maximum load capacity, or immediately following any repair of a structural or mechanical component of the ladder assembly. NFPA 1914, *Inspection and Test Procedures for Aerial Ladders*, contains inspection requirements. Inspections are the joint responsibility of the principal operator

and vehicle mechanic qualified to perform the annual inspection. A record of the inspections and tests will be documented on Air Force Form 1828, *Vehicle Historical Record*. **NOTES:** Aerial devices used for fire fighting purposes will be inspected and tested at least annually to comply with NFPA Standard 1914, Testing for Fire Department Aerial Devices. Many of the tests and actions may be performed by qualified fire department personnel; however, it is recommended the actions and tests be performed by a third-party testing company or the aerial device manufacturer. A record of the action and tests will be documented on Air Force Form 1828.

16.4.5.2. Articulating and extendible boom platforms will be inspected and tested annually. Special inspections and tests will be conducted immediately following any use of the work platform when the work platform may have been loaded beyond the manufacturer's rated capacity, or immediately following any repair of a structural or mechanical component of the boom or work platform assembly. Attachment 11, Inspection and Test Procedures for Articulating and Extendible Boom Platforms, contains inspection requirements. Inspections will be carried out jointly by the principal operator and a vehicle mechanic qualified to perform the annual inspection of the vehicle. A record of the inspection and test will be recorded on AF Form 1828. When the personnel platform is an attachment to a telescoping derrick or crane with a rated capacity higher than that of the work platform, test procedures contained herein will not apply and testing will be accomplished according to applicable technical order (TO) or manufacturer's maintenance manual.

16.4.5.3. For information on the use of a crane or derrick to hoist personnel, utilizing work platforms, refer to OSHA 29 CFR 1926.550, *Cranes and Derricks*.

16.4.6. Operations:

16.4.6.1. The manufacturer of aerial devices is required by ANSI Standard 92.2 to publish manuals and to provide for the distribution of the manuals to the dealers and direct sale purchasers. These manuals will be secured by the Air Force user of this equipment and be readily available for use by workers and contain the following information:

16.4.6.1.1. Description, specifications, and ratings of the aerial device.

16.4.6.1.2. Operating instructions for the aerial device and its auxiliary systems.

16.4.6.1.3. Precautions relating to multiple configurations such as performing aerial work from a moving vehicle.

16.4.6.1.4. Instructions regarding routine and frequency of recommended maintenance.

16.4.6.1.5. Replacement part information.

16.4.6.1.6. Instruction markings per paragraph **16.4.6.2.**

16.4.6.1.7. Operating instructions.

16.4.6.2. The manufacturer is also required to attach to each aerial device a plate or plates (located in a readily accessible area which is clearly visible) stating:

16.4.6.2.1. Make, model, and manufacturer's serial number;

16.4.6.2.2. Rated capacity;

16.4.6.2.3. Platform height;

16.4.6.2.4. Maximum recommended operating pressures of hydraulic or pneumatic systems, or both;

16.4.6.2.5. Hazards inherent in the operation of an aerial device;

16.4.6.2.6. Manufacturer's marking which describes the function of each control;

16.4.6.2.7. Insulated or noninsulated; **NOTE:** Insulating aerial devices do not protect personnel from phase to phase or phase to ground contacts at the platform end.

16.4.6.2.8. Qualification voltage and date of test;

16.4.6.2.9. Year of manufacture;

16.4.6.2.10. Number of platforms;

16.4.6.2.11. Category of aerial device; and

16.4.6.2.12. Manufacturer's rated line voltage. Where alternative configurations are possible, the plate will show by chart, schematic, or scale the capacities of all combinations in their operating positions and cautions or restrictions, or both, for operation of all alternate or combinations of alternate configurations. These plates will not be removed from the device, painted over, or otherwise made unavailable for reference by the operator.

16.4.6.3. Workers required to use vehicle-mounted elevating and rotating work platforms will be thoroughly trained in all aspects of the job before being assigned work with this equipment. This will include "hands-on-training" prior to actual participation in "on-the-job" training tasks. Completion of operator training and specific qualification will be entered in individual's training records (MIMICs or other data retrieval system).

16.4.6.4. Before a mobile unit is moved for travel, the aerial device will be secured in the specified lower traveling position (to prevent rotation) by the use of cradles or locking devices according to the manufacturer's instructions.

16.4.6.5. The unit will be visually inspected and the lift controls tested prior to each shift or day's work to determine the unit and controls are in safe working condition. The override feature explained in paragraph **16.4.6.6.** will be tested at this time. A record of this test will be **NOTED** on Air Force Form 1806, *Operator's Inspection Guide and Trouble Report*.

16.4.6.6. Articulating and extendible boom platforms, primarily designed as personnel carriers, will have both platform (upper) and lower controls. Upper controls will be in or beside the platform within easy reach of the operator. In order to prevent any inadvertent actuation of the boom positioning controls at the platform the use of an unlocking device shall precede the use of the control itself and shall be maintained simultaneously during the use of the controls. The unlocking device may be incorporated into each control. Lower controls will provide for overriding the upper controls. Controls will be plainly marked as to their function. The override mode shall be capable of preventing boom movement with the lower control station unattended. Lower level controls will not be operated unless permission has been obtained from the employee in the lift, except in case of emergency. Whenever a worker is in or on an elevated work platform, there will be at least one person qualified to operate the equipment stationed near the lower level control panel.

16.4.6.6.1. Emergency Stop. A control shall be provided at the platform to effect an emergency stop of platform movement. This control shall not require continuous actuation for a stop condition.

16.4.6.6.2. Outrigger Controls. When the aerial device is equipped with outrigger controls, these controls shall be guarded to protect against inadvertent operation, and shall return to neutral when released by the operator. The controls shall be located so the operator can see the outrigger being operated.

16.4.6.7. Boom and basket load limits specified by the manufacturer will not be exceeded.

16.4.6.8. An aerial lift truck will not be moved when the boom is elevated in a working position with personnel in the basket, except for equipment which is specifically designed for this type of operation. In all cases, the manufacturer's operating instructions will be followed.

16.4.6.9. Vehicle-mounted elevating and rotating work platforms will not be used during high winds, electrical storms, or any other adverse weather conditions which could (when determined by a competent authority) endanger workers using the platform.

16.4.6.10. Platforms other than buckets or baskets shall include a guardrail system:

16.4.6.10.1. The guardrail system shall include a top rail around its upper periphery. The top rail shall be 42 inches high, above the platform surface, designed to withstand 300 pounds of force.

16.4.6.10.2. The guardrail system shall include at least one rail approximately midway between the top rail and the platform surface, designed to withstand 300 pounds of force.

16.4.6.10.3. The platform shall include toeboards on all sides. The minimum toeboard height shall be 4 inches. Toeboards may be omitted at the access opening.

16.4.6.10.4. The configuration of the aerial platform shall include access for personnel entering the platform when it is in the lowered position. Access steps or rungs shall have a slip-resistant surface. Flexible materials such as cables, chains, and rope may be used across access openings not more than 30 inches wide.

16.4.6.11. A positioning belt or full body harness and lanyard (not to exceed 2 feet in length) will be worn by each bucket or platform occupant. The lanyard will be attached to the boom or basket.

16.4.6.12. Belting off to an adjacent pole, structure, or equipment while working from an aerial lift will NOT be permitted.

16.4.6.13. Workers will always stand firmly on the floor of the basket and will NOT sit or climb on the edge of the basket or use planks, ladders, or other devices for a work position.

16.4.6.14. Climbers equipment will NOT be worn while performing work from an aerial lift.

16.4.6.15. Aerial devices, including insulated aerial devices, will NOT be brought into contact with an electrical conductor. Workers will NOT rely on the dielectric capabilities of aerial devices.

16.4.6.16. When work is to be performed near a suspected source of nonionizing radiation (i.e., radar and microwave equipment), prior consultation with the host BE personnel is required. (Refer to Chapter 30 to AFOSH Standard 91-50.)

16.4.6.17. Before the aerial device is used, the worksite shall be surveyed for hazards such as untamped earth fills; ditches; drop-offs and floor obstructions; debris; overhead obstructions and electrical conductors; weather conditions; and presence of unauthorized persons.

16.4.6.18. Before and during each use, the operator shall:

16.4.6.18.1. Check for overhead obstructions and electrical conductors.

16.4.6.18.2. Ensure the load weight does not exceed the manufacturer's rated capacity for the platform or load lifting device.

16.4.6.18.3. Ensure outriggers and stabilizers are used if the manufacturer's instructions require their use.

16.4.6.18.4. Ensure guardrails are properly installed and the gates are closed.

16.4.6.18.5. Use outrigger pads when necessary to provide firm footing.

16.4.6.18.6. Set brakes.

16.4.6.18.7. Chock wheels before using an aerial lift on an incline.

16.4.7. Maintenance and Repair of Powered and (or) Mobile Units:

16.4.7.1. If deficiencies that affect the safe operation of the equipment are discovered during the daily operator inspection (or during use), the equipment will immediately be removed from service until repairs can be made. When repairs are made to the ladder, boom, or work platform, the manufacturer's recommended maintenance procedures shall be followed and the tests outlined in paragraph **16.4.5.** will be conducted prior to returning the aerial device to service.

16.4.7.2. All repairs will be accomplished by qualified personnel.

16.5. Manually-Propelled and Self-Propelled Mobile Work Platform and Scaffolds (Towers):

16.5.1. Working Loads:

16.5.1.1. Work platforms and scaffolds will carry the designed load under varying circumstances depending upon the conditions of use. Aircraft maintenance work platform loads are specified in TOs for each type of mobile work platform. Parts, additions, or accessories necessary for the safe use of platforms and scaffolds will be an integral part of the design.

16.5.1.2. Specific design and construction requirements are not a part of this standard because of the wide variety of materials and design possibilities. However, the design used will produce a mobile ladder stand or scaffold that will safely hold the specified loads. The material selected will be strong enough to meet the test requirements and will be protected against corrosion and deterioration.

16.5.1.2.1. The design working load of ladder stands will be calculated on the basis of one or more 250-pound persons with 50 pounds of equipment each.

16.5.1.2.2. The design load of scaffolds will be calculated on the basis of:

16.5.1.2.2.1. Light--Designed and constructed to carry a work load of 25 pounds per square foot.

16.5.1.2.2.2. Medium--Designed and constructed to carry a work load of 50 pounds per square foot.

16.5.1.2.2.3. Heavy--Designed and constructed to carry a work load of 75 pounds per square foot.

NOTE: Ladder stands and scaffolds will support at least four times the design workload.

16.5.1.3. The materials used in mobile ladder stands and scaffolds will permit the overall structure to conform to specifications of strength, dimensions, and weights outlined in this standard to safely support the design work load.

16.5.1.4. Bolts or other fasteners used to assemble ladders, scaffolds, and towers will be large enough and in sufficient amount at each connection to develop the designed strength of the unit.

16.5.1.5. The operator will ensure there are no sharp edges, burrs, or other hazards to personnel on exposed surfaces.

16.5.2. Work Levels:

16.5.2.1. The maximum work level height will not be more than four times the minimum or least base dimension (width) of any mobile ladder stand or scaffold. Where the basic mobile unit does not meet this requirement, suitable outrigger frames will be used to obtain this least base dimension or the unit will be tied with guy wires or braced to keep the unit from tipping.

16.5.2.2. The minimum platform width for any work level will not be less than 20 inches for mobile scaffolds (towers). Ladder stands will have a minimum step width of 16 inches.

16.5.2.3. The supporting structure for the work level will be rigidly braced, using cross bracing or diagonal bracing with rigid platforms at each work level.

16.5.2.4. The steps of ladder stands will be fabricated with slip-resistant treads or covered with a slip-resistant coating.

16.5.2.5. The work level platform of scaffolds will be of wood, aluminum, plywood planking, or steel or expanded metal, for the full width of the scaffold, except for necessary openings. Work platforms will be secured to the support structure. Planking will be 2-inch (nominal) scaffold grade minimum 1,500 fiber (f) (stress grade) construction grade lumber or equivalent.

16.5.2.6. Scaffold work platforms at work levels 10 feet or higher will have guardrails, midrails, and toeboards which meet the requirements outlined in paragraph **16.4.6.10.**

16.5.2.7. Scaffolds will have a climbing ladder or stairway (for access and egress) which is either affixed or built into the scaffold. The ladder or stairway will be located so its use will not have a tendency to tip the scaffold. A landing platform will be provided at intervals not to exceed 30 feet.

16.5.2.8. When moving mobile units between engines on the same wing and along wing flaps (short distances), it is not acceptable for more than two workers to remain on the platform. Movement of manually-propelled mobile work platforms with personnel on the working platform is NOT allowed from one wing of an aircraft to the other, nor to other sections of the aircraft. Self-propelled elevating work platforms must be in the lowered position when traversing any distances greater than stated above. If equipment is left on the work platform when the unit is being moved, the equipment must rest securely on the platform protected by the rail or toeboard.

16.5.2.9. When using self-propelled mobile work platforms, which have manufacturer-installed structural anchor points and the platform is elevated 10 feet or more above the surface, positioning belts or full-body harnesses shall be worn with lanyard attached to the structural anchor point. When self-propelled work platforms have not been manufactured with an approved structural anchor point, protective guardrails, midrails (when required), and toeboards must be installed on all open sides, except the side facing the structure (i.e., aircraft, buildings) when it is within 14 inches of the working surface.

16.5.2.10. Anchorages for lanyards which tie off one worker will be capable of supporting 5,000 pounds (22.2 kilonewton [kN]) per worker attached. They shall be designed, installed, and used as part of a complete personal fall arrest system which maintains a safety factor of two, under the supervision of a qualified person. (See OSHA Standard 29 CFR 1910.66, *Personal Fall Arrest System, Appendix C.*)

16.5.2.11. Lanyards, "D" rings, snap-hooks, and all components of a fall arrest system will be capable of sustaining a minimum tensile load of 5,000 pounds (22.2 kN). (See OSHA Standard 29 CFR 1910.66, Appendix C.)

16.5.3. Operations:

16.5.3.1. The training requirements at paragraph **16.4.6.3.** also apply to all manually-propelled elevating aerial platforms and self-propelled elevating work platforms.

16.5.3.2. The operator shall be aware that the operating and safety manuals, including the manual defining the responsibilities of dealers, owners, lessors, lessees, users, and operators, are stored on the aerial platform and the location where they are stored. The operator shall be familiar with the manuals stored on the aerial platform and consult them when questions arise with respect to the aerial platform.

16.5.3.3. Before use each day or at the beginning of each shift, the aerial platform shall be given a visual inspection and functional test including, but not limited to, the following:

16.5.3.3.1. Operating and emergency controls.

16.5.3.3.2. Safety devices.

16.5.3.3.3. Personal protective devices, including fall protection.

16.5.3.3.4. Air, hydraulic, and fuel system leaks.

16.5.3.3.5. Cables and wiring harness.

16.5.3.3.6. Loose or missing parts.

16.5.3.3.7. Tires and wheels.

16.5.3.3.8. Placards, warnings, and control markings.

16.5.3.3.9. Outriggers, stabilizers, and other structures.

16.5.3.3.10. Guardrail system.

16.5.3.3.11. Items specified by the manufacturer.

16.5.3.4. Refer to paragraph **16.4.6.17.** for workplace inspection information.

16.5.3.5. The operator shall ensure the following before each elevation of the platform:

16.5.3.5.1. The aerial platform is operated on a surface within the limits specified by the manufacturer.

16.5.3.5.2. The outriggers, stabilizers, extendable axles, or other stability enhancing means are used as required by the manufacturer.

16.5.3.5.3. Guardrails are installed and access gates or openings are closed per manufacturer's instructions.

16.5.3.5.4. The load and its distribution on the platform and any platform extensions are according to the manufacturer's rated capacity for the specific configuration.

16.5.3.5.5. There is adequate clearance from overhead obstructions.

16.5.3.5.6. Minimum safe approach distances to energized power lines and parts are maintained.

16.5.3.5.7. The operator and all other personnel on the platform wear fall protection devices and other safety gear, as required at all times.

16.5.3.6. Users shall inspect and maintain the aerial platform as required to ensure proper operation. The frequency of inspection and maintenance shall be determined by the manufacturer's recommendation and be compatible with operating conditions and the severity of the operating environment. Aerial platforms that are not in proper operating condition shall be immediately removed from service until repaired. Repairs shall be made by a qualified person and the repairs shall be in conformance with the manufacturer's recommendations.

16.5.3.7. The following requirements for controls of manually elevated platforms will be met:

16.5.3.7.1. Direction and function are clearly marked;

16.5.3.7.2. Platform elevating and lowering mechanisms are self-holding; and

16.5.3.7.3. Platform elevating and lowering mechanisms are readily accessible from the ground. Controls at the platform are optional.

16.5.3.8. The following requirements for upper controls of power elevated platforms will be met:

16.5.3.8.1. Are clearly marked as to direction and function;

16.5.3.8.2. Are of the type that automatically return to the off or neutral position when released;

16.5.3.8.3. Are protected against inadvertent operation;

16.5.3.8.4. Are readily accessible to the operator;

16.5.3.8.5. Include a control that must be continuously activated in order for upper controls to be operational and that automatically returns to the off position when released.

16.5.3.9. Any aerial platform equipped with a powered elevating assembly shall have a clearly marked emergency lowering means readily accessible from ground level.

16.5.3.10. The aerial platform shall be equipped with a readily identifiable emergency stop device, located at the upper control and lower control stations, that will deactivate all powered functions that affect the movement of the platform.

16.5.3.11. The control system shall be designed so a single malfunction in the control system will not result in unintended movement of the platform.

16.5.4. Wheels or Casters:

16.5.4.1. Wheels or casters will be of proper design for strength and dimensions to support four times the design working load.

16.5.4.2. Scaffold casters will be provided with a positive wheel and (or) swivel lock to prevent movement. Two of the four casters on ladder stands will be lockable and the swivel type.

16.5.4.3. Where leveling of the elevated work platform is required, screwjacks or other suitable means for adjusting the height will be provided.

16.5.4.4. A minimum of two brakes, wheel locks, or permanently installed jacks will be operable on all mobile work platforms.

16.5.5. Mobile Tubular Welded Frame Scaffolds:

16.5.5.1. Units will be designed to comply with the requirements of paragraphs **16.4.1.**, **16.4.2.**, and **16.4.4.**

16.5.5.2. Scaffolds will be properly braced by cross braces or diagonal braces for securing vertical members together laterally. The cross braces will be of a length that will automatically square and align vertical members so the erected scaffold is always plumb, square, and rigid.

16.5.5.3. Spacing of panels or frames will be consistent with the loads imposed. The frames will be placed one on top of the other with coupling or stacking pins to provide proper vertical alignment of the legs.

16.5.5.4. Where uplift may occur, panels will be locked together vertically by pins or other equivalent means.

16.5.5.5. The erection of a scaffold exceeding 50 feet in height above the base will be done according to the manufacturer's instructions under the supervision of a qualified professional engineer. The installation civil engineering activity is the authorizing agency for scaffold erection.

16.5.6. Mobile Tubular Welded Sectional Folding Scaffolds:

16.5.6.1. General. Units, including sectional stairway and sectional ladder scaffolds, will be designed to comply with the requirements of paragraphs **16.4.1.**, **16.4.2.**, and **16.4.4.**

16.5.6.2. Stairway. A stairway and work platform will be part of the structure of each sectional folding stairway scaffold.

16.5.6.2.1. A set of pivoting and hinged folding diagonal and horizontal braces.

16.5.6.2.2. A detachable work platform.

16.5.6.3. Sectional Folding Stairway Scaffolds. These will be designed as medium duty scaffolds except when they are equipped with a "high clearance" base section. **NOTE:** High clearance bases have a greater open space so the scaffold may be placed over an obstruction such as machinery or shrubbery. These special base sections will be designed as light duty scaffolds. When high clearance bases are used to support upper sectional folding stairway scaffolds, the load capacity of the entire scaffold will be reduced accordingly. A sectional folding stairway scaffold will not exceed 4 ½ feet in width and 6 feet in length.

16.5.6.4. Sectional Folding Ladder Scaffolds. Sectional folding ladder scaffolds will be designed as light duty scaffolds including the special base (open end) sections which are designed for high clearance (over obstructions). For certain special applications the 6-foot folding ladder scaffolds, except special high clearance base sections, will be designed for use as medium duty scaffolds. The width of a sectional folding ladder scaffold will not exceed 6 feet 6 inches for a 6-foot long unit, 8 feet 6 inches for an 8-foot unit, or 10 feet 6 inches for a 10-foot long unit. Each sectional folding ladder scaffold will contain:

16.5.6.5. End Frames. The end frames of sectional ladder and stairway scaffolds will be designed so the horizontal bearers provide support for multiple planking levels.

16.5.6.6. Erection of Scaffold. Refer to paragraph **16.5.5.5.**

16.5.7. Mobile Tube and Coupler Scaffolds:

16.5.7.1. Design. Units will be designed to comply with the applicable requirements of paragraphs **16.4.1.**, **16.4.2.**, and **16.4.4.**

16.5.7.2. Material. The material used for the couplers will be of a structural type, such as a drop-forged steel, malleable iron, or structural grade aluminum. The use of gray cast iron is prohibited.

16.5.7.3. Erection of Scaffold. Refer to paragraph **16.5.5.5.**

16.5.8. Mobile Work Platforms:

16.5.8.1. Design. Units will be designed for the use intended and will comply with the requirements of paragraphs **16.4.1.**, **16.4.2.**, and **16.4.4.**

16.5.8.2. Base Width. The minimum base width will conform to paragraph **16.5.2.2.**

16.5.8.3. Bracing. Rigid diagonal bracing to vertical members will be provided.

16.5.9. Mobile Ladder Stands:

16.5.9.1. Design. Units will comply with applicable requirements of paragraphs **16.4.1.**, **16.4.2.**, and **16.4.4.**

16.5.9.2. Base Width. The minimum base width will conform to paragraph **16.5.2.2.**. The maximum length of the base section will be the total length of combined steps and top assembly, measured horizontally, plus five-eighths of an inch per step of rise.

16.5.9.3. Steps. Steps will be uniformly spaced, with a rise of not less than 9 inches, nor more than 10 inches, and a depth of not less than 7 inches. The slope of the steps section will be a minimum of 55 degrees and a maximum of 60 degrees measured from the horizontal.

16.5.9.4. Handrails:

16.5.9.4.1. Units having more than four steps or 60 inches vertical height to the top step will be equipped with handrails.

16.5.9.4.2. Handrails will be a minimum of 29 inches high and will be the same height all along the step. Measurements will be taken vertically from the center of the step.

16.5.9.4.3. Load design will meet requirements of paragraph **16.5.1.2.1.**

16.5.10. Mobile Work Platforms and Ladder Stands:

16.5.10.1. Aircraft maintenance platforms and stands fall within criteria specified in paragraphs **16.5.8.** and **16.5.9.** For the most part, aircraft maintenance platforms are mobile work platforms. However, when configured with steps to reach work levels, they are required to meet the criteria of mobile ladder stands relative to step dimensions and handrails.

16.5.10.2. Aircraft maintenance platforms and stands will be maintained free of grease, oil, accumulation of ice, snow, mud, or any other slippery substance or object which could cause slips and falls. Step treads and walking surfaces will be maintained in good repair. Repairs will be made by replacing worn surfaces with suitable materials or made safe by using abrasive or nonslip surfacing agents.

16.5.10.3. Removable protective guardrails, (midrails when required), and toeboards may be provided on mobile work platforms in lieu of those permanently affixed. Work platforms positioned 14 or more inches from the working surface (i.e., aircraft, buildings) will have guardrails (and toeboards, if work levels are 10 feet or higher above the ground or floor) installed on all open sides. Guardrails and toeboards will meet the criteria of paragraph **16.4.6.10.3.** and will be used on all work platforms.

16.5.10.4. Prior to any user ascending to a raised portion of a mobile platform, all locking devices (i.e., pins, collars, etc.) will be installed; hydraulic pressure shall be released and the platform slowly lowered until locking devices are securely engaged; and hydraulic pressure valve(s) shall be closed. If the raisable portion of the platform cannot be elevated from ground level, the user may ascend to that platform portion and adjust the platform height. However, prior to any task or work being started, the requirements for locking devices, pressure release, and closing valves will be met.

16.5.10.5. Reflective materials for marking mobile work platforms will be used to the maximum extent authorized by the appropriate TOs, such as 35-1-3, *Corrosion Prevention, Painting and Marking USAF Equipment*. When not being transported, mobile work platforms will be secured to prevent collision with aircraft, vehicles, or other equipment. Those units with a designated flight line storage area for mobile work platforms will have the area approved by ground safety officials. (See AFOSH Standard 91-100, *Aircraft Flight Line-Ground Operations and Activities*, for further guidance.)

16.5.10.6. Mobile work platforms will be inspected by the user daily, before use. Items to be inspected will include brakes, jacks, wheel locks, securing cables, locking pins, hydraulic systems, anchor connections, and overall equipment condition. While any mobile work platform is in use, the user shall lock at least two wheel brakes, lock all casters to prevent swiveling, and (if so equipped) set all floor jacks.

16.5.10.7. When mobile work platforms are being moved:

16.5.10.7.1. Under certain restrictive conditions, personnel and equipment may remain on work platforms when they are being moved. (See paragraph **16.5.2.8.**)

16.5.10.7.2. When platforms are to be towed, they will be equipped with hitches designed for such purpose.

16.5.10.7.3. When platforms are being towed by vehicles, the following rules apply:

16.5.10.7.3.1. Towing speed is 5 miles per hour for two or more maintenance stands. Towing speed for one maintenance stand is 10 miles per hour. However, should surfaces and terrain make it necessary, speed will be reduced accordingly.

16.5.10.7.3.2. No more than four type B1, B4, B5, and similar small stands may be towed as follows: two sets of two in tandem on a double hitch or two in tandem on a single hitch. Type B3, J7, and similar large stands will be towed singly on a center mounted hitch. Four-wheeled units will not be towed behind two-wheeled units. Large pieces of AGE, when towed in tandem, will not block the driver's vision of the last item being towed.

16.5.10.7.3.3. .Safety pins will be used to secure pintle hooks and trailer hitches.

16.5.10.8. When mobile work platforms are used in operations such as fuel cell repair or refueling vehicle maintenance where static electricity is hazardous to the work operation, the platform will be grounded and equipped with static discharge plates to allow personnel to dissipate accumulated static electricity.

16.5.10.9. Maintenance of mobile work platforms and ladder stands will be done as specified in the appropriate 35-series TOs.

Figure 16.1. Vehicle-Mounted Elevating and Rotating Work Platforms, Manually-Propelled and Self-Propelled Mobile Work Platforms, and Scaffolds (Towers) Checklist.

F16.1. This is not an all inclusive checklist. It, like all the checklists in this standard, simply highlights some critical items in the corresponding chapters. Other requirements exist that are not included in the checklist. Where appropriate, MAJCOMs, FOAs DRUs, local safety staffs, and supervisors will add to this checklist to include command or individual location or shop-unique requirements or situations.

F16.1. 1. Clearances.

F16.1.2. Do operators of aerial lifts operating near electric power lines maintain clearances as required by paragraph **16.4.3.**?

F16.1.3. Are operators of aerial lifts aware that the use of proximity devices do not release them from the responsibility of assuring compliance with clearances required by paragraph **16.4.3.**? (Reference **16.4.4.**)

F16.2. Inspection and Test Procedures.

F16.2.1. Are aerial ladders inspected and tested annually, and:

F16.2.2. When it is known or suspected the ladder may have been loaded beyond the manufacturer's rated capacity? (Reference **16.4.5.1.**)

F16.2.3. Immediately following any repair of a structural or mechanical component of the ladder assembly? (Reference**16.4.5.1.**)

F16.2.4. Is Attachment 10 used as a guide by the principal operator and a qualified vehicle mechanic while performing tests or annual inspections of aerial ladders? (Reference **16.4.5.1.**)

F16.2.5. Are articulating and extendible boom platforms inspected and tested annually, and: (Reference **16.4.5.2.**)

F16.2.6. When it is known or suspected that the work platform may have been loaded beyond the manufacturer's rated capacity? (Reference **16.4.5.2.**)

F16.2.7. Immediately following any repair of a structural or mechanical component of the boom or work platform assembly? (Reference **16.4.5.2.**)

F16.2.8. Is Attachment 11 used as a guide by the principal vehicle operator and a qualified vehicle mechanic while performing tests or annual inspections of articulated and extendible boom platforms? (Reference **16.4.5.2.**)

F16.2.9. Are tests and inspections recorded on AF Form 1828? (Reference **16.4.5.2.**)

F16.3. Operations.

F16.3.1. Is the manufacturer's operator's manual for the aerial device available for use by operators, and does it contain the information outlined in paragraph **16.5.6.1.**?

F16.3.2. Have operators of vehicle-mounted elevating and rotating work platforms been thoroughly trained and qualified in the use of this equipment? (Reference **16.5.6.3.**)

F16.3.3. Are surfaces of mobile work platforms and scaffolds protected from corrosion or other deterioration? (Reference **16.5.1.2.**)

F16.3.4. Are all exposed surfaces of ladder stands, work platforms, or scaffolds free of sharp edges, burrs, or other hazardous projections? (Reference **16.5.1.5.**)

F16.3.5. Is the maximum work level height of mobile ladder stands or scaffolds restricted to a level no greater than four times the least base dimension of the supporting frame? (Reference **16.5.2.1.**)

NOTE: This level may be exceeded if design includes use of outriggers or unit is secured to fixed structure to prevent tipping and (or) falling of work platform.

F16.3.6. Are the supporting structures for the work levels rigidly braced? (Reference **16.5.2.3.**)

F16.3.7. Are the steps of all ladder stands constructed of slip-resistant materials or covered with a slip-resistant coating? (Reference **16.5.2.4.**)

F16.3.8. Is the work level platform of scaffolds extended to full width of scaffold secured to the support structure, and of sufficient strength to safely support the workload? (Reference **16.5.2.5.**)

F16.3.9. Are guardrails, midrails (when required), and toeboards installed at work platform level of all scaffolding with work levels 10 feet or more above ground or floor level? (Reference **16.5.2.6.**)

F16.3.10. Are scaffolds provided with a climbing ladder for access and egress? (Reference **16.5.2.7.**)

F16.3.11. Do supervisors ensure that personnel are not allowed to remain on manually-propelled work platforms when they are being moved from one wing of an aircraft to the other, nor to other sections of the aircraft? (Reference **16.5.2.8.**)

F16.3.12. Are at least two of four casters on ladder stands or work platforms equipped with positive swivel locks or wheel locks to prevent movement? (Reference **16.5.4.2.**)

F16.3.14. When leveling elevated work platform is required, are screwjacks or other suitable means for adjusting the height provided? (Reference **16.5.4.3.**)

F16.3.15. Is there a minimum of two brakes, wheel locks, or permanently installed jacks operational on all mobile work platforms? (Reference **16.5.4.4.**)

F16.3.16. Is the erection of scaffold towers exceeding 50 feet in height above the base done according to the manufacturer's instructions, under supervision of a qualified professional engineer from the civil engineers' staff? (Reference **16.5.5.5.**)

F16.3.17. Is the use of folding stairway scaffolding confined to sectional width of 4 1/2 feet and 6 feet in length? (Reference **16.5.6.3.**)

F16.4. Mobile Tube and Coupler Scaffolds.

F16.4.1 Are the materials used for the couplers of a structural type (i.e., drop-forged steel, malleable iron, or structural grade aluminum)? (Reference **16.5.7.2.**) ,

F16.4.2. Is the use of gray cast iron prohibited from use for the coupler? (Reference **16.5.7.2.**)

F16.5. Mobile Work Platforms.

F16.5.1. Does the base width conform to the requirements in **16.5.2.2.**? (Reference **16.5.8.2.**)

F16.5.2. Are rigid diagonal bracings provided to the vertical members? (Reference **16.5.8.3.**)

F16.5.3. Mobile Ladder Stands. Are handrails provided on mobile ladder stands that have more than four steps or 60 inches vertical height to the top step? (Reference **16.5.9.4.1.**)

F16.5.4. Mobile Work Platforms and Ladder Stands:

F16.5.5. Are protective guardrails, mid-rails (when required), and toeboards installed on mobile work platforms and ladder stands used in aircraft maintenance areas where work levels are 10 feet or higher above the ground or floor? (Reference **16.5.10.3.**)

F16.5.6. Are locking pins installed and floor locks engaged before any task or work has started? (Reference **16.5.10.4.**)

F16.5.7. Are reflective materials for marking mobile work platforms used to the maximum extent authorized by the appropriate TOs? (Reference **16.5.10.5.**)

F16.5.8. When not being transported, are work platforms secured against movement? (Reference **16.5.10.5.**)

F16.5.9. Are mobile work platform and (or) ladder stands inspected daily before use? (Reference **16.5.10.6.**)

F16.5.10. Is maintenance of mobile work platforms and ladder stands accomplished as required by applicable 35-series TOs? (Reference **16.5.10.9.**)

F16.5.11. Are mobile platforms and (or) ladders used for fuel cell repair or other hazardous areas (such as refueling unit maintenance) equipped with bonding and (or) ground connections and static license plates to permit personnel to dissipate accumulated static electricity? (Reference **16.5.10.8.**)

F16.6. Towing Work-Stands.

F16.6.1. Is the maximum speed limited to 5 miles per hour for tandem towed units; 10 miles per hour for single units? (Reference **16.5.10.7.3.1.**)

F16.6.2. Are small stands such as B1, B4, or B5 units towed with a maximum of two stands on a single hitch; double hitch tow vehicles limited to four stands -- two side by side with one tandem on each hitch? (Reference **16.5.10.7.3.2.**)

Chapter 17

SCAFFOLDING

17.1. General Information. This chapter applies to all scaffolding used in the Air Force, except rolling (mobile) scaffolds (towers), which are covered in **Chapter 16**. It specifies criteria for the assembly, erection, storage, and safe use of scaffolding. Since the Air Force primarily uses pre-formed tubular scaffolding, construction requirements for wooden pole scaffolding are not part of this chapter. In the event an Air Force organization must construct a wood scaffold, the design and material specifications contained in Occupational Safety and Health Administration (OSHA) Standard 29 Code of Federal Regulations (CFR) 1910.28, *Safety Requirements for Scaffolding*; 1910 *Subpart D, Walking-Working Surfaces*; 29 CFR 1926 *Subpart L, Scaffolds*; and 29 CFR 1915.71, *Scaffolds, Ladders, and Other Working Surfaces*, will be followed. For information on manually-propelled mobile ladder stands, mobile work platforms, or mobile towers, see **Chapter 16**.

17.2. Hazards and Human Factors. Elevated work platforms and scaffolds present hazards associated with falls or falling objects. These hazards are usually the result of poorly designed equipment or from workers erecting them improperly or using them incorrectly. Further, personnel create hazards by building makeshift platforms, removing guardrails and toeboards, or failing to secure tools and equipment. These hazards can be minimized by properly designing platforms and scaffolds, by training personnel, and by supervisors enforcing safe work practices. It is also important that supervisors consider the physiological effects of high places on individual workers, such as dizziness or instability. Factors such as illness, fatigue and physical deficiencies can also contribute to mishaps.

17.3. Requirements:

17.3.1. Procurement. Scaffolds and support equipment procured for the Air Force will meet the design and construction specifications of OSHA 29 CFR 1910.28, *Safety Requirements for Scaffolding*.

17.3.2. General Requirements for Scaffolds:

17.3.2.1. Scaffolds will be provided for persons engaged in work that cannot be done safely from the ground or from solid construction. They will be constructed and erected only by qualified, trained personnel. When ladders are used they will conform to the requirements in **Chapter 7**.

17.3.2.2. The footing or anchorage for scaffolds will be designed to support the maximum intended load without settling or displacement. Unstable objects such as barrels, boxes, loose brick, or concrete blocks will not be used to support scaffolds or planks.

17.3.2.3. Guarding requirements follow:

17.3.2.3.1. Guardrails and toeboards will be installed on open sides and ends of platforms more than 10 feet above the ground or floor except:

17.3.2.3.1.1. Scaffolding which is wholly within the interior of a building and covering the entire floor area of any room providing no side is exposed to a hoistway, elevator shaft, stairwell, or other floor openings.

17.3.2.3.1.2. Needle-beam scaffolds and floats used by structural iron workers.

17.3.2.3.2. Scaffold guarding will consist of the following parts:

17.3.2.3.2.1. A guardrail of 2- by 4-inch lumber of equivalent material installed at a height of 36 to 42 inches above the platform.

17.3.2.3.2.2. A midrail (when required in this standard) of 1- by 4-inch lumber or equivalent.

17.3.2.3.2.3. Vertical supports installed at intervals not exceeding 10 feet.

17.3.2.3.2.4. Toeboards a minimum of 4 inches in height.

17.3.2.3.2.5. A wire mesh screen will be installed between the toeboard and guardrail (extending the entire length of the opening) where persons are required to work or pass beneath the scaffold. The wire mesh will be number 18-gauge US Standard wire one-half-inch mesh or equivalent.

17.3.2.4. Scaffolds and their components will be capable of supporting at least four times the maximum intended load.

17.3.2.5. Scaffolds will not be altered or moved horizontally while they are in use or occupied.

17.3.2.6. Scaffolds, their accessories, and other devices prescribed in this chapter, will be maintained in good condition. Scaffold parts will be inspected when scaffolds are erected and during their use. If any of the following deficiencies are found, the scaffold will not be used until it is repaired or replaced:

17.3.2.6.1. Accessory or structural damage.

17.3.2.6.2. Missing parts or members (for example, braces, toeboards, guardrails, anchors, etc.).

17.3.2.6.3. Broken, bent, or rusted frames or accessories.

17.3.2.6.4. Altered parts or accessories. (For example, substitution of smaller planking, bolts, or anchors for those required).

17.3.2.6.5. Broken or deteriorated lifelines or ropes and their attachments and (or) anchorages.

17.3.2.6.6. Any other conditions which would jeopardize the safety of workers. Scaffolds found defective will be tagged with a danger tag.

17.3.2.7. Scaffolds will not be loaded in excess of the working load for which they are intended.

17.3.2.8. Planking will be Scaffold Grade as recognized by grading rules for the species of wood used. The maximum permissible spans of 1 ¼ x 9-inch or wider planks are shown in **Table 17.1.**

17.3.2.9. Nails or bolts used in the construction of scaffolds will be of adequate size and in sufficient numbers at each connection to develop the designed strength of the scaffold. Nails will not be subjected to a straight pull and will be driven full length.

17.3.2.10. Planking or platforms will be overlapped (minimum 12 inches) and secured from movement.

17.3.2.11. A ladder or equivalent safe access will be provided.

17.3.2.12. Scaffold planks will extend beyond their end supports by not less than 6 inches or more than 12 inches.

17.3.2.13. The poles, legs, or uprights of scaffolds will be plumb and securely and rigidly braced to prevent swaying and displacement.

17.3.2.14. Materials being hoisted onto a scaffold will have a tag line.

17.3.2.15. Workers will wear hard hats during erection, maintenance, and teardown of overhead scaffolding. The use of protective gloves is also recommended.

17.3.2.16. Adverse weather conditions such as ice, snow, rain, and wind can create a hazardous working surface for personnel on scaffolds. The following rules will apply to performing work under adverse weather (also see **Chapter 11**).

17.3.2.16.1. Personnel will not work on scaffolds which are covered with ice or snow. If the work surface remains slippery after ice or snow removal, it will be sanded or otherwise treated to prevent workers from slipping.

17.3.2.16.2. Personnel will not work on scaffolds during storms or high winds. Due to the many types and uses of scaffolding, it is impractical to determine specific wind criteria for work stoppage. Supervisors are responsible for accessing unsafe environmental and climatic work conditions and they will take the necessary preventive measures to protect workers.

17.3.2.17. Tools, materials, and debris will not be allowed to accumulate in quantities that could cause a hazard. When possible, containers will be provided on scaffolds for the storage of loose materials. Supervisors will ensure that good housekeeping practices are followed so workers are not subject to tripping hazards.

17.3.2.18. Chemically-active environments can completely destroy the strength of fiber rope. Rope materials such as polyester, nylon, and manila can be damaged when exposed to caustics and acids. When fiber rope is used near any work involving the use of corrosive substances or chemicals, the manufacturer should be consulted for assistance in determining the proper type of rope to be used.

17.3.2.19. Wire or fiber rope used for scaffold suspension will be able to support at least six times the intended load.

17.3.2.20. The use of shore scaffolds or lean-to scaffolds is prohibited.

17.3.2.21. Lumber sizes, when used in this standard, refer to nominal sizes except where otherwise stated.

17.3.2.22. Scaffolds will be secured to permanent structures by anchor bolts, reveal bolts, or other equivalent means. Window cleaners' anchor bolts will not be used.

17.3.2.23. Special care will be taken to protect scaffold members, including wire or fiber ropes, when using heat-producing processes.

17.3.2.24. A covered storage area is recommended to protect scaffolding from damage and deterioration.

17.3.2.25. Wooden parts of scaffolding will not be painted as paint can hide defects. Clear varnish, lacquer, shellac, or linseed oil will be used when wood protection is needed.

17.3.2.26. Individual workers will not attempt to manually lift or move scaffold members which are excessively heavy, or because of their shape or size, cannot be safely handled. In these cases, assistance will be obtained from other workers or mechanical handling equipment will be used.

17.3.2.27. Hand tools used to assemble scaffolding will be in good condition. When powered hand tools are used, they will be electrically grounded or of double insulated construction.

17.3.3. Tube and Coupler Scaffolds. When structural metals other than those stated in paragraphs **17.3.3.1.**, **17.3.3.2.**, and **17.3.3.3.** are used in scaffold construction, they must be designed to carry the equivalent load (4 times the intended load).

17.3.3.1. A light-duty tube and coupler scaffold will have posts, bearers, runners, and bracing of nominal 2-inch outside diameter (O.D.) steel tubing. The posts will be spaced no more than 10 feet along the length of the scaffold and the scaffold will be no wider than 6 feet.

17.3.3.2. A medium-duty tube and coupler scaffold will have posts, runners, and bracing of nominal 2-inch O.D. steel tubing. Posts will not be spaced more than 8 feet along the scaffold. Bearers for these scaffolds may be either 2-inch or 2 ½-inch O.D. based on the following criteria:

17.3.3.2.1. If the scaffold is 6 feet wide, the bearer diameter must be 2 ½-inches O.D.

17.3.3.2.2. If the scaffold is 5 feet wide, the bearer diameter may be 2 inches O.D.

17.3.3.3. A heavy-duty tube and coupler scaffold will have all posts, runners, and bracing of nominal 2-inch O.D. steel tubing, with the posts spaced not more than 6 feet 6 inches along the length of the scaffold. The scaffold will be no wider than 6 feet.

17.3.3.3.1. Tube and coupler scaffolds will be limited in heights and working levels to those permitted in **Table 17.2.** Drawings and specifications of tube and coupler scaffolds greater than the limitations in **Table 17.2.** will be designed by a structural or civil engineer. Design drawings or copies will be made available to the installation engineering office for inspection purposes.

17.3.3.3.2. Tube and coupler scaffolds will be constructed and erected to support four times the maximum intended loads as prescribed in **Table 17.2.** or as set in the specifications established by a structural or civil engineer.

17.3.3.3.3. Posts will be accurately spaced, as required above, erected on suitable bases, and maintained plumb.

17.3.3.3.4. Runners will be erected along the length of the scaffold. They will be located on both the inside and the outside posts at an even height. Runners will be interlocked to form continuous lengths and coupled to each post. The bottom runners will be located as close to the base as possible. Runners will be placed not more than 6 feet 6 inches on centers.

17.3.3.3.5. Bearers will be installed transversely between posts. They will be securely coupled to the posts bearing on the runner coupler. When coupled directly to the runners, the coupler must be kept as close to the posts as possible.

17.3.3.3.6. Bearers will be at least 4 inches, but not more than 12 inches, longer than the post or runner spacing. Bearers may be cantilevered for use as brackets to carry not more than two planks.

17.3.3.3.7. Cross bracing will be installed across the width of the scaffold at least every third set of posts horizontally and every fourth runner vertically. Bracing will extend diagonally from the inner and outer runners upward to the next outer and inner runners.

17.3.3.3.8. Longitudinal diagonal bracing will be installed at approximately a 45-degree angle from near the base of the first outer post upward to the extreme top of the scaffold. Where the longitudinal length of the scaffold permits, bracing will be duplicated beginning at every fifth post. In a similar manner, longitudinal diagonal bracing will also be installed from the last post extending back and upward toward the first post. Where conditions preclude the attachment of this bracing to the posts, bracing may be attached to the runners.

17.3.3.3.9. The entire scaffold will be tied to and securely braced against the building at intervals not exceeding 30 feet horizontally and 26 feet vertically.

17.3.4. Tubular Welded Frame Scaffolds:

17.3.4.1. Metal tubular frame scaffolds, including accessories such as braces, brackets, trusses, screw legs, ladders, etc., will be designed and proved to safely support four times the maximum intended load.

17.3.4.2. Spacing of panels or frames will be consistent with the loads imposed.

17.3.4.3. Scaffolds will be braced by cross-bracing or diagonal braces, or both, for securing vertical members together laterally. The cross-braces will be of a length which will automatically square and align vertical members. This will ensure the erected scaffold is always plumb, square, and rigid. Brace connections will be made secure.

17.3.4.4. Scaffold legs will be set on adjustable bases or plain bases placed on mud sills or other foundations able to support the maximum intended load.

17.3.4.5. The frames will be placed one on top of the other with coupling or stacking pins to provide proper vertical alignment of the legs.

17.3.4.6. Where uplift may occur, panels will be locked together vertically by pins or other equal means.

17.3.4.7. To prevent movement, the scaffold will be secured to the building or structure at intervals not to exceed 30 feet horizontally and 26 feet vertically.

17.3.4.8. Drawings and specifications for frame scaffolds over 125 feet in height above the base plates will be designed by a structural or civil engineer. Copies of the drawings and specifications will be maintained by the installation structural or civil engineer for as long as the scaffolding is in use.

17.3.4.9. Tubular welded frame scaffolds will be erected by competent and experienced personnel.

17.3.4.10. Inspections will be made of all welded frames and accessories and any maintenance, including painting or minor corrections authorized by the manufacturer, will be made before use.

17.3.4.11. Outrigger Scaffold requirements follow:

17.3.4.11.1. Outrigger beams will extend not more than 6 feet beyond the face of the building. The inboard end of outrigger beams, measured from the fulcrum point to the extreme point of support, will not be less than one and one-half times the outboard end in length. The beams

will rest on edge, with sides plumb, and the edges horizontal. The fulcrum point of the beam will rest on a secure bearing at least 6 inches in each horizontal dimension. The beam will be secured in place against movement and braced at the fulcrum point against tipping.

17.3.4.11.2. The inboard ends of outrigger beams will be securely supported either by (a) struts bearing against sills in contact with the overhead beams or ceiling, or (b) tension members secured to the floor joists underfoot, or (c) by both if necessary. The inboard ends of outrigger beams will be secured against tipping. The entire supporting structure will be braced in both directions to prevent any horizontal movement.

17.3.4.11.3. Unless outrigger scaffolds are designed by a structural or civil engineer, they will be constructed and erected according to **Table 17.3.** Outrigger scaffolds designed by a structural and or civil engineer will be constructed and erected according to such design. Design copies will be maintained by the installation structural or civil engineer. In the event the job location is off the installation, the on-site supervisor will have a copy of the drawings and specifications in their possession. Copies will be retained as long as the scaffold is erected.

17.3.4.11.4. Planking will be laid tight and extend to within 3 inches of the building wall. Planking will be nailed or bolted to outriggers.

17.3.4.11.5. Where additional working levels are required to be supported by the outrigger method, the plans and specifications of the outrigger and scaffolding structure will be designed by a structural or civil engineer.

17.3.5. Masons' Adjustable Multiplepoint Suspension Scaffold:

17.3.5.1. The scaffold will be capable of sustaining a working load of 50 pounds per square foot and will not exceed that figure.

17.3.5.2. The scaffold will be provided with hoisting machines that meet the requirements of Underwriters' Laboratories or Factory Mutual Engineering Corp.

17.3.5.3. The platform will be supported by wire ropes (to conform with requirements in paragraph **17.3.2.19.**), suspended from overhead outrigger beams.

17.3.5.4. The scaffold outrigger beams will consist of structural metal securely fastened or anchored to the frame or floor system of the building or structure.

17.3.5.5. Each outrigger beam will be equal in strength to at least a standard 7-inch, 15.3-pound steel I-beam, be at least 15 feet long, and not project more than 6 feet 6 inches beyond the bearing point.

17.3.5.6. Where the overhang exceeds 6 feet 6 inches, outrigger beams will be composed to stronger beams or multiple beams. They will be installed according to approved designs and instructions.

17.3.5.7. If channel iron outrigger beams are used in place of I-beams, they will be fastened together with the flanges turned out.

17.3.5.8. Outrigger beams will be set and maintained with their webs in a vertical position.

17.3.5.9. A stop bolt will be placed at each end of every outrigger beam.

17.3.5.10. The outrigger beam will rest on suitable wood-bearing blocks.

17.3.5.11. Scaffold parts such as bolts, nuts, fittings, clamps, wire ropes, and outrigger beams and their fastenings will be kept in good working condition and will be inspected before each installation and daily thereafter while the scaffold is in use.

17.3.5.12. The free end of the suspension wire ropes will be equipped with proper size thimbles and be secured by splicing or other equivalent means. The running ends will be attached to the hoisting drum and at least four turns of rope will remain on the drum.

17.3.5.13. Where a single outrigger beam is used, the steel shackles or clevises, with which the wire rope are attached to the outrigger beams, will be placed directly over the hoisting drums.

17.3.5.14. The scaffold platform will be equal in strength to at least 2-inch planking. (For maximum planking spans, see **Table 17.1.**)

17.3.5.15. When workers are working on the scaffold and an overhead hazard exists, overhead protection will be provided, not more than 9 feet above the platform. It will consist of 2-inch planking or material of equivalent strength laid tight.

17.3.5.16. Scaffolds will only be installed or moved under the control of the on-site job supervisor or a structural or civil engineer.

17.3.6. Two-Point Suspension Scaffolds (Swinging Scaffolds):

17.3.6.1. Two-point suspension scaffold platforms will not be less than 20 inches nor more than 36 inches wide. The platform will be fastened to the hangers by U-bolts or by other equal means.

17.3.6.2. The hangers of two-point suspension scaffolds will be made of wrought iron, mild steel, or other material having a cross-sectional area capable of sustaining four times the maximum intended load. They will be designed with a support for the guardrail, intermediate rail, and toeboard.

17.3.6.3. When hoisting machines are used on two-point suspension scaffolds, they will be tested and approved by Underwriters' Laboratories or Factory Mutual Engineering Corp.

17.3.6.4. The roof irons or hooks will be of wrought iron, mild steel, or other equal material of proper size and design, securely installed and anchored. Tiebacks of ¾-inch manila rope or the equivalent will serve as a secondary method of anchorage. The tiebacks will be installed at right angles to the face of the building, whenever possible, and secured to a structurally sound portion of the building.

17.3.6.5. Two-point suspension scaffolds will be suspended by wire, synthetic, or fiber ropes. Wire and fiber ropes will conform to paragraphs **17.3.2.18.** and **17.3.2.19.** of this standard.

17.3.6.6. The blocks for fiber ropes will be of standard 6-inch size, consisting of at least one double and one single block. The sheaves of blocks will fit the size of rope used.

17.3.6.7. Wire, synthetic, and fiber ropes, slings, hangers, platforms, and other supporting parts will be inspected before every installation. Daily inspections will be made while the scaffold is in use.

17.3.6.8. On suspension scaffolds designed for a working load of 500 pounds, no more than two workers will be permitted to work at one time. On suspension scaffolds with a working load of 750 pounds, no more than three workers will be permitted to work at one time. Each worker will be protected by a personal fall arrest system. The system will be attached to substantial members of

the structure (not the scaffold), or to securely rigged lines, which will safely suspend the worker in case of a fall.

17.3.6.9. Two-point suspension scaffolds will be lashed to the building or structure to prevent them from swaying. Window cleaners' anchors will not be used for this purpose.

17.3.6.10. The platform of every two-point suspension scaffold will be one of the following types:

17.3.6.10.1. The side stringer of ladder-type platforms will be clear straight-grained spruce or material of equal strength and durability. The rungs will be of straight-grained oak, ash, or hickory, at least one and one-eighth of an inch in diameter, with seven-eighths of an inch tenons mortised into the side stringers at least seven-eighths of an inch. The stringers will be tied together with tie rods not less than one-quarter of an inch in diameter, passing through the stringers and riveted up tight against washers on both ends. The flooring strips will be spaced not more than five-eighths of an inch apart except at the side rails where the space may be one inch. Ladder-type platforms will be constructed according to **Table 17.4.**

17.3.6.10.2. Plank-type platforms will be made of not less than nominal 2- by 8-inch unspliced planks. They will be cleated together on the underside starting 6 inches from each end. The intervals in between cleats will not exceed 4 feet. The plank-type platform will not extend beyond the hangers more than 18 inches. A bar will be fastened to the platform at each end to prevent its slipping off the hanger. The span between hangers for plank-type platforms will not exceed 10 feet.

17.3.6.10.3. Beam platforms will have side stringers of lumber not less than 2- by 6-inches set on edge. The span between hangers will not exceed 12 feet when beam platforms are used. The flooring will be supported on 2- by 6-inch crossbeams, laid flat and set into the upper edge of the stringers with a snug fit, at intervals of not more than 4 feet, nailed in place. The flooring will be of 1- by 6-inch material properly nailed. Floorboard will not be spaced more than one-half of an inch apart.

17.3.7. Stone Setters' Adjustable Multiple-Point Suspension Scaffolds:

17.3.7.1. The scaffold will be able to support a working load of 25 pounds per square foot and will not be overloaded. Scaffolds will not be used for storage of stone or other heavy materials.

17.3.7.2. The hoisting machine and its supports will be of a type tested and listed by Underwriters' Laboratories or Factory Mutual Engineering Corp.

17.3.7.3. The platform will be fastened to the hangers by U-bolts or other equal means.

17.3.7.4. The scaffold unit will be suspended from metal outriggers, iron brackets, wire rope slings, or iron hooks which will safely support the maximum intended load.

17.3.7.5. Outriggers, when used, will be set with their webs in a vertical position, anchored to the building or structure, and provided with stop bolts at each end.

17.3.7.6. The scaffold will be supported by wire rope conforming with paragraph **17.3.2.19.** and suspended from overhead supports.

17.3.7.7. The free ends of the suspension wire ropes will be equipped with proper size thimbles, secured by splicing or other equal methods. The running ends will be securely attached to the hoisting drum and at least four turns of rope shall remain on the drum at all times.

17.3.7.8. When two or more scaffolds are used on a building or structure, they will not be bridged one to the other, but will be maintained at even height with platforms butting closely.

17.3.7.9. Scaffolds will only be installed or moved under the control of the on-site supervisor according to designs and instructions of the structural or civil engineer.

17.3.8. Single-Point Adjustable Suspension Scaffolds:

17.3.8.1. The scaffolding, including power units or manually operated winches, will be of a type tested and listed by Underwriters' Laboratories or Factory Mutual Engineering Corp.

17.3.8.2. The power units may be either electrically or air motor driven.

17.3.8.3. Power-operated gears and brakes will be enclosed.

17.3.8.4. In addition to the normal operating brake, power driven units must have an emergency brake which engages automatically when the normal speed of descent is exceeded.

17.3.8.5. Guards, midrails, and toeboards will completely enclose the cage or basket. Guardrails will be no less than 2 by 4 inches or the equivalent installed no less than 36 inches nor more than 42 inches above the platforms. Midrails will be 1 by 6 inches or the equivalent, installed equal distance between the guardrail and the platform. Toeboards will be a minimum of 4 inches in height.

17.3.8.6. The hoisting machines, cables, and equipment will be regularly serviced and inspected after each installation and every 30 days thereafter.

17.3.8.7. The units may be combined to form a two-point suspension scaffold. This type scaffold will comply with paragraph **17.3.6.**

17.3.8.8. The supporting cable will be straight for its entire length. The operator will not sway the basket or fix the cable to any intermediate points to change the original path of travel.

17.3.8.9. Equipment will be maintained and used according to the manufactures' instructions.

17.3.8.10. Suspension methods will conform to applicable provisions of paragraphs **17.3.5.** and **17.3.6.**

17.3.9. Boatswain's Chairs:

17.3.9.1. The chair seat will not be less than 12 by 24 inches and of 1-inch thickness. The seat will be reinforced on the underside to prevent the board from splitting.

17.3.9.2. The two fiber rope seat slings will be of 5/8-inch diameter, reeved through the four each seat holes so as to cross other on the underside of the seat.

17.3.9.3. Seat slings will be of at least 3/8-inch wire rope when a worker is conducting a heat-producing process such as gas- or arc-welding.

17.3.9.4. A personal fall arresting system will be in place and used to protect the worker when using a boatswain's chair. The lifeline will be attached to substantial members of the structure (not the scaffold), or to securely rigged lines, which will safely suspend the worker in case of a fall.

17.3.9.5. The tackle will consist of correct size ball bearing or bushed blocks and properly spliced 5/8-inch diameter first-grade manila rope.

17.3.9.6. The roof irons, hooks, or the object to which the tackle is anchored will be securely installed. Tiebacks, when used, will be installed at right angles to the face of the building and fastened to a chimney.

17.3.10. Carpenters' Brackets Scaffolds:

17.3.10.1. The brackets will consist of a triangular wood frame not less than 2 by 3 inches in cross section or of metal or equal strength material. Each part will be properly fitted and securely jointed.

17.3.10.2. Each bracket will be attached to the structure by one of the following methods:

17.3.10.2.1. A bolt no less than five-eighths of an inch in diameter will extend through the inside of the building wall.

17.3.10.2.2. A metal stud attachment device.

17.3.10.2.3. Welding to steel tanks.

17.3.10.2.4. Hooking over a well-secured and strong supporting member. The brackets will be spaced no more than 10 feet apart.

17.3.10.3. No more than two persons will occupy any given 10 feet of a bracket scaffold at any one time. Tools and materials will not exceed 75 pounds.

17.3.10.4. The platform will consist of at least two 2- by 9-inch nominal size planks extending not more than 18 inches or less than 6 inches beyond each end support.

17.3.11. Bricklayers' Square Scaffolds:

17.3.11.1. The squares will not exceed 5 feet in width and 5 feet in height.

17.3.11.2. Parts will not be less than those specified in **Table 17.5.**

17.3.11.3. The squares will be reinforced on both sides of each corner with 1- by 6-inch gusset pieces. They will also have braces 1 by 8 inches on both sides running from center to center of each part, or other methods to obtain equal strength and rigidity.

17.3.11.4. The squares will be set not more than 5 feet apart for medium duty scaffolds, and not more than 8 feet apart for light duty scaffolds. Bracing 1 by 8 inches, extending from the bottom of each square to the top of the next square, will be provided on both front and rear sides of the scaffold.

17.3.11.5. Platform planks will be at least 2- by 9-inch nominal size. The ends of the planks will overlap the bearers of the squares and each plank will be supported by not less than three squares.

17.3.11.6. Bricklayers' square scaffolds will not exceed three tiers in height and will be constructed and arranged so one square will rest directly above the other. The upper tiers will stand on a continuous row of planks laid across the next lower tier and be nailed down or otherwise secured to prevent displacement.

17.3.12. Horse Scaffolds:

17.3.12.1. Horse scaffolds will not be constructed or arranged more than two tiers and will not exceed 10 feet in height.

17.3.12.2. The parts of the horses will not be less than those specified in **Table 17.6.**

17.3.12.3. Horses will be spaced not more than 5 feet apart for medium duty and not more than 8 feet apart for light duty.

17.3.12.4. When arranged in tiers, each horse will be placed directly over the horse in the tier below.

17.3.12.5. On scaffolds arranged in tiers, the legs will be nailed down to the planks to prevent movement and each tier will be cross braced.

17.3.12.6. Horses or parts which have become weak or defective will not be used.

17.3.13. Needle Beam Scaffold:

17.3.13.1. Metal beams or equal material used in scaffolding will conform to paragraph **17.3.2.4.**

17.3.13.2. Ropes or hangers will be provided for supports. The span between supports on the needle beam will not exceed 10 feet for 4- by 6-inch timbers. Rope supports will be equivalent in strength to 1-inch diameter first-grade manila rope.

17.3.13.3. The ropes will be attached to the needle beams by a scaffold hitch or a properly made eye splice. The loose end of the rope will be tied by a bowling knot or by a round turn and one-half-hitch.

17.3.13.4. The platform span between the needle beams will not exceed 8 feet when using 2-inch scaffold plank. For spans greater than 8 feet, platforms will be designed based on requirements for the special span. The overhang of each end of the platform planks will not be less than 1 foot and not more than 18 inches.

17.3.13.5. When one needle beam is higher than the other, or when the platform is not level, the platform will be secured against slipping.

17.3.13.6. Unattached tools, bolts, and nuts used on needle beam scaffolds will be kept in suitable containers.

17.3.13.7. One end of a needle beam scaffold may be supported by a permanent structural member conforming to paragraph **17.3.2.4.**

17.3.13.8. Each person working on a needle beam scaffold 20 feet or more above the ground or floor and working with both hands, will be protected by a personal fall arresting system. The lifeline will be securely attached to substantial members of the structure (not the scaffold), or to securely rigged lines, which will safely suspend the worker in case of a fall.

17.3.14. Plasterers', Decorators', and Large Area Scaffolds:

17.3.14.1. Plasters', decorators', lathers', and ceiling workers' inside scaffolds will be constructed according to the general requirements set forth for independent wood pole scaffolds. (OSHA Standard 92 CFR 1910.28.)

17.3.14.2. Platform planks will be laid with the edges close together.

17.3.14.3. When independent pole scaffold platforms are erected in sections, the sections will be provided with connecting runways equipped with guardrails.

17.3.15. Interior Hung Scaffolds:

17.3.15.1. Interior hung scaffold should be hung or suspended from the roof structure or substantial ceiling beams.

17.3.15.2. The suspended steel wire rope will conform to paragraph **17.3.2.19.** Wire may be used providing the strength requirements of paragraph **17.3.2.19.** are met.

17.3.15.3. For hanging wood scaffolds, the following minimum nominal size material is recommended:

17.3.15.3.1. Supporting bearers 2 by 9 inches on edge.

17.3.15.3.2. Planking 2 by 9 inches or 2 by 10 inches, with a minimum span of 7 feet for heavy duty and 10 feet for light or medium duty.

17.3.15.3.3. Steel tube and coupler parts may be used for hanging scaffolds providing both types of scaffold are designed to sustain a uniformly distributed working load equivalent to heavy duty scaffold loads with a safety factor of four.

17.3.15.3.4. When a hanging scaffold is supported by wire rope, the rope will be wrapped at least twice around the supporting members and twice around the bearers of the scaffold. Each end of the wire rope will be secured by at least three standard wire rope clips.

17.3.15.3.5. Overhead supporting members will be inspected and checked for condition and strength before the scaffold is erected.

17.3.16. Ladder-Jack Scaffolds:

17.3.16.1. Ladder-Jack scaffolds will be limited to light duty and will not exceed a height of 20 feet above the floor or ground.

17.3.16.2. Ladders used in connection with ladder-jack scaffolds will be heavy duty. They will be designed and constructed as specified in **Chapter 7**.

17.3.16.3. The ladder jack will bear on the side rails in addition to the ladder rungs, or if bearing on rungs only, the bearing area will be at least 10 inches on each rung.

17.3.16.4. Ladders used in conjunction with ladder jacks will be placed, fastened, held, or equipped with devices to prevent slipping.

17.3.16.5. The wood platform planks will not be less than 2 inches nominal in thickness. Both metal and wood platform planks will overlap the bearing surface not less than 12 inches. The span between supports for wood will not exceed 8 feet. Platform width will not be less than 18 inchs.

17.3.16.6. Not more than two persons will occupy any given 8 feet of any ladder jack scaffold at any time.

17.3.17. Window-Jack Scaffolds:

17.3.17.1. Window-Jack scaffolds will be used only for the purpose of working at the window opening through which the jack is placed.

17.3.17.2. Window jacks will not be used to support planks placed between one window jack and another or for supporting other elements of scaffolding.

17.3.17.3. Window-Jack scaffolds will be provided with guardrails unless a personal fall arresting system is provided for the worker. **NOTE:** Window-Jack scaffolds will be used by one person only.

17.3.18. Roofing Brackets:

17.3.18.1. Roofing brackets will be constructed to fit the pitch of the roof.

17.3.18.2. Brackets will be secured in place by nailing in addition to the pointed metal projections. The nails will be driven full length into the roof. When rope supports are used, they will consist of first-grade manila of at least ¾-inch diameter, or equivalent.

17.3.18.3. A catch platform will be installed below the working area of roofs which are more than 20 feet from the ground to the eaves and have a slope greater than 3 inches in 12 inches without a parapet. The platform width will extend 2 feet beyond the projection of the eaves and will be provided with a safety rail, midrail, and toeboard. This requirement does not apply when employees engaged in work upon such roofs are protected by personal fall arresting systems.

17.3.19. Crawling Boards or Chicken Ladders:

17.3.19.1. Crawling boards will be at least 10 inches wide and 1 inch thick. Cleats will be 1 by 1-1/2 inches. The cleats will be equal in length to the width of the board and spaced at equal intervals not to exceed 24 inches. Nails will be driven through and clinched on the underside. The crawling board will extend from the ridge pole to the eaves when used in connection with roof construction, repair, or maintenance.

17.3.19.2. A firmly fastened lifeline of at least ¾-inch rope will be strung beside each crawling board for a handhold.

17.3.19.3. Crawling boards will be secured to the roof by ridge hooks or equally effective means.

17.3.20. Float or Ship Scaffolds:

17.3.20.1. Float or ship scaffolds will be limited to no more than three workers and a few light tools, such as those needed for riveting, bolting, and welding. They will be constructed according to paragraphs **17.3.20.2.**, **17.3.20.3.**, **17.3.20.4.**, **17.3.20.5.**, and **17.3.2.6.** Substitute design and materials are permitted, provided equal strength, stability, and safety are ensured.

17.3.20.2. The platform will not be less than 3 feet wide and 6 feet long, made of ¾-inch plywood, equivalent to American Plywood Association Grade B-B, Group 1, Exterior.

17.3.20.3. Under the platform, there will be two supporting bearers made from 2- by 4-inch or 1- by 10-inch rough, selected lumber, or better. They will be free of knots or other flaws and project 6 inches beyond the platform on both sides. The ends of the platform will extend about 6 inches beyond the outer edges of the bearer. Each bearer will be fastened to the platform.

17.3.20.4. An edging of wood not less than ¾ by 1½ inches, or equal, will be placed around all sides of the platform to prevent tools from rolling off.

17.3.20.5. Supporting ropes will be 1-inch diameter manila rope or equal, free from deterioration, chemical damage, flaws, or other imperfections. Rope connections will be such that the platform cannot shift or slip. If two ropes are used with each float, they should be arranged to provide four ends which are fastened to an overhead support. Each of the two supporting ropes will be hitched

around one end of a bearer and pass under the platforms to the other end of the bearer where it is hitched again, leaving enough rope at each end for the supporting ties.

17.3.20.6. Each worker will be protected by a personal fall arresting system. The lifeline will be attached to substantial members of the structure (not the scaffold) or to securely rigged lines, which will safely suspend the worker in case of a fall.

Table 17.1. Scaffold Grade Planking

	Materials				
	Full Thickness Undressed Lumber			Nominal Thickness lumber	
Working Load (p.s.f.)	25	50	75	25	50
Permissible Span (ft.)	10	8	6	8	9

NOTE: The maximum permissible span for 1 ¼ x 9-inch or wider plank of full thickness is 4 feet with medium loading of 50 p.s.f.

Table 17.2. Tube and Coupler Scaffolds – Light Duty.

Uniformly distributed load…….	Not to exceed 25 p.s.f.
Post spacing (longitudinal)…….	10 ft. 0 in.
Post spacing (transverse)……	6 ft. 0 on.

Working levels	Additional planked levels	Maximum height
1	8	125 ft.
2	4	125 ft.
3	0	91 ft. 0 in.

Table 17.3. Tube and Coupler Scaffold – Medium Duty

Uniformly distributed load…….	Not to exceed 50 p.s.f.
Post spacing (longitudinal)…….	8 ft. 0 in.
Post spacing (transverse)……	6 ft. 0 in.

Working levels	Additional planked levels	Maximum height
1	6	125 ft.
2	0	78 ft. 0 in.

Table 17.4. Tube and Coupler Scaffold – Heavy Duty

Uniformly distributed load…….	Not to exceed 75 p.s.f.
Post spacing (longitudinal)…….	6 ft. 6 in.
Post spacing (transverse)……	6 ft. 0 in.

Table 17.5. Outrigger Scaffolds

	Light Duty	Medium Duty
Maximum scaffold load	25 p.s.f.	50 p.s.f.
Outrigger size	2 x 10 in.	3 x 10 in.
Maximum outrigger spacing	10 ft. 0 in.	6 ft. 0 in.
Planking	2 x 9 in.	2 x 9 in.
Guardrail	2 x 4 in.	2 x 4 in.
Guardrail uprights	2 x 4 in.	2 x 4 in.
Toeboards (minimum)	4 in.	4 in.

Table 17.6. Ladder-Type Platforms

		Length of platform (feet)			
	12	14 & 16	18 & 20	22 & 24	28 & 30
Side stringers, minimum cross section (finished sizes:					
At ends (in.)	1 ¾ x 2 ¾	1 ¾ x 2 ¾	1 ¾ x 3	1 ¾ x 3	1 ¾ x 3 ½
At middle (in.)	1 ¾ x 3 ¾	1 ¾ x 3 ¾	1 ¼ x 4	1 ¾ x 4 ¼	1 ¾ x 5
Reinforcing strip: (minimum) (1)	……				
Rungs (2)	……				
Tie Rods:					
Number (minimum)	3	4	4	5	6
Diameter (minimum)	¼ in.	¼ in.	¼ in.	1.4 in.	¼ in.
Flooring, minimum finished size (in.)	½ x 2 ¾	½ x 2 ¾	½ x 2 ¾	½ x ¾	½ x 2 ¾

NOTES:

1. A 1/8 x 7/8 in., steel reinforcing strip or its equivalent shall be attached to the side or underside full length.
2. Rungs shall be 1 1/8 in., minimum, diameter with at least 7/8 in. diameter tenons, and the maximum spacing shall be 12 in. center to center.

Table 17.7. Bricklayers' Square Scaffolds.

Members	Dimensions (Inches)
Bearers or horizontal members	2 by 6
Legs	2 by 6
Braces at corners	1 by 6
Braces diagonally from center frame	1 by 8

Table 17.8. Horse Scaffolds.

Members	Dimensions (Inches)
Horizontal members or bearers	3 by 4
Legs	1 ¼ by 4 ½
Longitudinal brace between legs	1 by 6
Gusset brace at top of legs	1 by 8
Half diagonal braces	1 ¼ by 4 ½

Figure 17.1. Scaffolding Checklist.

F17.1. This is not an all inclusive checklist. It, like all the checklists in this standard, simply highlights some critical items in the corresponding chapters. Other requirements exist that are not included in the checklist. Where appropriate, MAJCOMs, FOAs DRUs, local safety staffs, and supervisors will add to this checklist to include command or individual location or shop-unique requirements or situations.

F17.1.1. Are scaffolds constructed and erected only by qualified and trained personnel? (Reference **17.3.2.1.**)

F17.2. Are scaffold footings and anchorages designed to support the maximum intended load without settling or displacement? (Reference **17.3.2.2.**)

F17.3. Is the use of unstable objects such as barrels, boxes, loose brick, or concrete blocks prohibited to support scaffolds or planks? (Reference **17.3.2.2.**)

F17.4. Are guardrails, midrails, and toeboards installed on open sides and ends of platforms more than 10 feet above the working level? (Reference **17.3.2.3.1.**)

F17.5. Are guardrails constructed of 2- by 4-inch lumber or equivalent? (Reference **17.3.2.3.2.1.**)

F17.6. Are midrails, when in use, constructed of 1- by 4-inch lumbar or equivalent? (Reference **17.3.2.3.2.1.**)

F17.7. Are toeboards a minimum of 4 inches in height? (Reference **17.3.2.3.2.4.**)

F17.8. Is a wire mesh screen installed between the toeboard and guardrail along the entire length of opening where persons are required to work or pass beneath the scaffold? (Reference **17.3.2.3.2.5.**)

F17.9. Is the scaffolding designed to support at least four times the intended load? (Reference **17.3.2.4.**)

F17.10. Is scaffolding maintained in good condition and are parts inspected prior to their use? (Reference **17.3.2.6.**)

F17.11. If deficiencies such as missing parts or members, broken, bent, or rusted parts, or any other condition that could effect the integrity of the scaffold repaired or replaced immediately? (Reference **17.3.2.6.**)

F17.12. Is a ladder or safe equivalent provided for workers to access the scaffolding when needed? (Reference **17.3.2.11.**)

F17.13. Are scaffold pole, legs, or uprights plumb and securely and rigidly braced to prevent swaying and displacement? (Reference **17.3.2.13.**)

F17.14. Do personnel involved in erection, maintenance, and teardown of overhead scaffolding wear hard hats? (Reference **17.3.2.15.**)

F17.15. Is a plan established addressing adverse weather conditions and measures to be taken to protect workers performing work under adverse weather? (Reference **17.3.2.16.**)

F17.16. Are tools, materials, and debris that could create a hazard prohibited from accumulating on scaffolding. **NOTE:** When possible containers for the storage of loose materials will be provided. (Reference **17.3.2.17.**)

F17.17. Is the use of shore scaffolds or lean-to scaffolds prohibited? (**17.3.2.21.**)

F17.18. When protective coating for parts of wooden scaffolding is needed; is clear varnish, lacquer, or shellac, and not paint used? (Reference **17.3.2.26.**)

F17.19. Is scaffolding that is excessively heavy, bulky, or awkward, moved with the assistance of mechanical handling equipment in order to prevent injury to workers? (Reference **17.3.2.27.**)

NOTE: Due to the numerous types and different requirements for each specific type of scaffolding only general requirements are included in this checklist. For specific safety and design requirements involving different types of scaffolding consult your local ground safety staff or civil engineer.

Chapter 18

MACHINERY

18.1. General Information. Refer to Occupational Safety and Health Administration (OSHA) 29 Code of Federal Regulations (CFR) 1910 Subpart O, Machinery and Machine Guarding, and the National Safety Council (NSC) *Accident Prevention Manual for Industrial Operations*, for additional definitions and Figures.

18.2. Hazards:

18.2.1. All mechanical motion is potentially hazardous. Motion hazards, such as rotating devices, cutting or shearing blades, in-running nip points, reciprocating parts, linear moving belts and pulleys, meshing gears, and uncontrolled movement of failing parts, are examples of motion which may be peculiar to any one machine or job operation. Personnel working within areas where they are exposed to machinery or equipment hazards must be aware of the potential for mishaps.

18.2.2. Machine operators and others are exposed to moving parts and can get clothing, hair, or body parts caught in the machinery. The chance of these mishaps occurring is greater as fatigue increases or as attention decreases. Pressure to get the job done may result in either overlooking sound work practices or attempting to bypass guards. This is particularly true when the operation necessitates the removal of guards to make adjustments, etc.

18.2.3. The techniques and skills required for setting up and operating equipment demand effective training programs.

18.2.4. Injuries resulting from working on or near moving machinery range from minor cuts and bruises to a severed limb. This hazard exists where shop machinery is being operated and may exist at all job sites where vehicles, equipment, or machinery are in use.

18.3. General Requirements:

18.3.1. Acquisition. Machines and attachments may be both locally and centrally procured. All newly acquired machines will meet the design and construction requirements identified in Military Specifications (Mil Spec). OSHA standards identified in **Table 18.1.** will be used when no Mil Specs exist. Supervisors needing access to OSHA standards should contact the installation ground safety office. If a machine is not specifically covered by this standard, a Mil Spec, or an OSHA standard, the installation ground safety staff shall be contacted for assistance in identifying applicable criteria.

18.3.2. Installation. Machines designed for fixed locations or that may tip over will be securely fastened to the floor or other suitable foundation to eliminate all movement or walking. Machines equipped with rubber feet, nonskid foot pads, or similar vibration dampening materials will be installed according to the manufacturer's recommendations. Weight limitation of floors or foundations will be considered prior to machinery installation. (OSHA 29 CFR 1910.212, *General Requirements for all Machines*)

18.3.2.1. Sufficient space will be provided around each machine to allow materials to be handled with the least possible interference from and to other workers and to allow access for maintenance and repair. (For detailed information on shop layout, passageways, and machine clear zones, refer to **Chapter 7**.)

18.3.2.2. The installation bioenvironmental engineering (BE) personnel will determine the requirements for exhaust systems. Normally, machines that develop fine dust and fumes that are hazardous to workers should be equipped with effective hoods, connected to an exhaust system. An interlocking device should be installed to link the machine's power supply and the exhaust system to prevent the operation of the machine without the exhaust system operating. In shops where small numbers of installed machines are not continuously in operation, portable collection systems may be more cost effective. Hoods and exhaust systems will be constructed and installed to meet requirements in AFOSH Standard 161-2, *Industrial Ventilation*.

18.3.2.3. The installation BE personnel will determine the requirements for lighting. At least 50 foot-candles of illumination will be maintained at the machine operator's position. Fine work may require 100 or more foot-candles. This can be obtained with a combination of increased general lighting plus supplementary lighting. If fluorescent lighting is used, it will be installed to eliminate any stroboscopic effect with moving machinery.

18.3.2.4. Machine energy isolating devices will be capable of being locked out by a designed hasp or other attachment or an integral part to which, or through which, a lock can be affixed or the energy isolated by simply disconnecting an electrical plug.

18.3.3. Training. Personnel shall be trained by the supervisor or a designated trainer on all machinery or equipment they are required to use. Only trained personnel or those undergoing supervised on-the-job training will operate shop machinery or equipment.

18.3.3.1. Operators will be trained in the proper operation, safety procedures, cleaning, hazard recognition, and emergency shutdown procedures for each machine or piece of equipment they are to use.

18.3.3.2. Operators will also be trained on machine or equipment maintenance or repairs they are allowed to perform.

18.3.3.3. Services craft or hobby shop patrons will be trained by the supervisor or a designated trainer on the proper operation, safety procedures, hazard recognition, and emergency procedures for each piece of equipment they will use. Arts and Crafts Equipment Qualification card, will be issued to identify the machinery the patron is authorized to operate. Personnel will not operate machines or equipment if this card is not available.

18.3.3.4. Supervisors and operators will receive training on lockout and tagout procedures contained in **Chapter 22** to ensure the purpose of the program is understood, and that each has the knowledge and skills required to apply and remove locks and tags. Operators will be retrained when there is a change in energy control procedures or a change in job assignment, machines, or equipment. Services patrons will be trained to understand the lockout and tagout program but will not apply or remove locks or tags.

18.3.4. Safe Operations:

18.3.4.1. Supervisors Will:

18.3.4.1.1. Maintain manufacturer's manuals for all machinery or equipment under their control. In the absence of these, supervisors will develop local OIs, to include job safety, maintenance (including cleaning and sanitizing as required), lubrication, and inspection. Such instructions will identify operator and maintenance technician responsibilities. (OSHA 29 CFR 1910.212, and 1910.263, *Bakery Equipment*.)

18.3.4.1.2. Ensure only authorized personnel operate and maintain shop equipment.

18.3.4.1.3. Periodically evaluate machinery or equipment operators to ensure they are following proper and safe operating procedures. See paragraph **18.2.3.** for required training.

18.3.4.2. General Requirements:

18.3.4.2.1. Machines will be used only for work within the rated capacity specified by the machine manufacturer.

18.3.4.2.2. One or more methods of machine guarding shall be provided to protect the operator and other employees or patrons in the machine area from hazards such as those created by point of operation, in-running nip points, rotating parts, flying chips, power transmission apparatus, and sparks. For additional guidance refer to OSHA Publication 3067, *Concepts and Techniques of Machine Safeguarding*. (OSHA 29 CFR 1910.212)

18.3.4.2.3. Machines will not be operated unless all guards are securely in place and operational. Any time the guards are removed, the power cord will be disconnected or the machinery will be turned off and locked out and tagged out. ((OSHA 29 CFR 1910.212 and 1910.147, *The Control of Hazardous Energy (Lockout/Tagout)* and **Chapter 21**)). Also refer to paragraph **18.3.5.4.**

18.3.4.2.4. Machines will be maintained so, while running, they are free of excessive vibration. (OSHA 29 CFR 1910.213)

18.3.4.2.5. No blade, cutterhead, or collar will be placed or mounted on a machine arbor unless it has been accurately sized and shaped to fit the arbor. (OSHA 29 CFR 1910.213, *Woodworking Machinery Requirements*).

18.3.4.2.6. Arbors and mandrels will have a firm and secure bearing and be free from excessive end play. (OSHA 29 CFR 1910.213)

18.3.4.2.7. Machines will never be left unattended with the control switch in the ON position. The operator will remain at the machine until all motion has ceased. In the event of a power failure, the operator will immediately switch the machine to the OFF position.

18.3.4.2.8. Machines will be used only for work within the rated capacity specified by the machine manufacturer.

18.3.4.2.9. Personnel who are operating, helping, or observing machine operations shall comply with the personal protective equipment (PPE) requirements for each particular machine and general PPE requirements for the work area. (See **Chapter 14** for additional information.)

18.3.4.2.10. Loose fitting clothing, neckties, rings, bracelets, or other apparel that may become entangled in moving machinery, power transmission apparatus, or moving parts will not be worn by machine operators, their helpers, or anyone in close proximity of this equipment.

18.3.4.2.11. Hair nets or caps shall be worn to keep long hair under control and safely away from moving machinery, power-transmission apparatus, or moving parts. (See **Chapter 9** and **Chapter 14** for additional information.)

18.3.4.2.12. The operator will allow all moving parts to come to a complete stop before any attempt is made to clean or clear jammed work or debris from any part of a machine. Chips or

other particles will be removed using brushes, tools designed for such a purpose, or compressed air. If compressed air is used, the nozzle pressure at the discharge end of the air line will be as low as practical, but will not exceed 15 pounds per square inch (psi). Compressed air will not be used to blow chips or other debris from a worker's body or clothing. To prevent flying chips and particles from striking the eyes and skin of the operator and bystanders, screens, barriers, or protective cones attached to air nozzles will be used.

18.3.5. Inspection and Maintenance:

18.3.5.1. Supervisors shall ensure all machines are inspected upon receipt to detect and correct defects. Technical Order (TO) 34-1-3, *Inspection and Maintenance of Machinery and Shop Equipment*, will be followed for periodic inspection requirements.

18.3.5.2. Operator's inspection shall be conducted prior to the start of each shift, following a new setup, or when operators change. This inspection will ensure operating components are in good working order and guards, interlocks, and other protective devices are activated or in place, operating properly, and in proper adjustment. Necessary maintenance or repair will be performed and completed before the machine is placed in operation.

18.3.5.3. Repairs that are beyond the operator's capability will only be accomplished by a qualified technician.

18.3.5.4. When maintenance is needed, whether it is done by the supervisor, operator, or a specialized technician, machines will be completely shut down and all energy isolating devices locked out in the **OFF** position. The appropriate warning tag will be affixed to the machine or energy source. In cases where machine or equipment design prohibits the lockout capability, the tagout procedure with the AF Form 982, ***Do Not Start*** tag shall be used. When machines and equipment are overhauled or replaced, energy isolating devices or controls that can be locked out must be installed. (See **Chapter 20** for specific guidance on installation of locks and tags.)

18.3.5.5. All guards, interlocks, and safety devices shall be in place prior to restoring power, unless their removal is required by technical data for an operational check.

18.3.5.6. Services patrons will not perform maintenance on shop equipment. Malfunctioning equipment will be shut down immediately and reported to the supervisor.

18.3.5.7. Electrical powered equipment will be unplugged at the outlet or turned off at the circuit breaker or disconnect switch before washing the equipment or the surrounding area when water could splash on the equipment. Electrical components will be protected when there is danger of water or cleaning liquids entering them.

18.3.5.8. Records of supervisor inspections and any machine maintenance will be maintained.

18.3.6. Machine Layout Requirements:

18.3.6.1. Machines that are subject to movement because of vibration, rotation, or other reasons shall be securely fastened to prevent their movement while operating. Exceptions to this are machines (for example, meat slicers) which have very little vibration or movement and can be satisfactorily held in position with rubber feet.

18.3.6.2. Sufficient space for material handling and maintenance will be provided around each machine. The local ground safety office staff and civil engineer should be contacted for assistance on layout problems.(See **Chapter 7** for additional information on shop layout.)

18.4. Woodworking Machinery:

18.4.1. Hazards and Human Factors:

18.4.1.1. Hazards. The primary hazard of woodworking equipment is high-speed, revolving cutting blades and knives. Contact with these parts can result in lacerations and amputation of body parts. Other job hazards that account for a wide variety of injuries and illnesses are: jamming or kicking back of material and wood chips; flying objects (wood chips, broken saw blades, etc.); poor housekeeping; improper material handling; unsatisfactory maintenance of machinery; excessive equipment noise; and inhalation of wood dust.

18.4.1.2. Human Factors. Many of the injuries that occur in woodworking jobs result from personnel failing to follow prescribed safe operating practices. These failures result from worker attitude, inadequate training, and supervisory failure to enforce safe job procedures. The use of machine guards, environmental controls, good training, and maintenance programs, coupled with supervisory enforcement of protective equipment use and safe job practices, can eliminate most mishap-producing factors.

18.4.2. Requirements:

18.4.2.1. Tilting-Arbor and Tilting-Table Saws: (OSHA 29 CFR 1910.213)

18.4.2.1.1. Table saws will be equipped with a hood that covers the blade and automatically adjusts itself to the thickness of the material upon which it rides. The hood will cover the part of the saw blade exposed above the material and will be adaptable to cover tilted blades.

18.4.2.1.2. Table saws will be provided with a spreader to prevent the wood's internal stresses from clamping down on the saw blade.

18.4.2.1.3. Table throat openings will be kept as small as possible to prevent material from dropping below the level of the table. Several size throat pieces will be available to accommodate rabbeting, grooving, and dadoing operations.

18.4.2.1.4. Devices such as antikickback dogs and fingers or safety hold-down wheels will be installed when ripping material. Antikickback dogs and fingers will be inspected before each use and be kept sharp to maintain their holding power.

18.4.2.1.5. Saw operators will not reach over a revolving saw blade for any reason. If this appears necessary, a helper will be positioned at the output end of the saw.

18.4.2.1.6. Saw blades will not be stopped after the power is off by thrusting a piece of wood against the cutting edge or side of the blade.

18.4.2.1.7. Saw tables should extend far enough on either side of a machine to give full support to any length of board that may be cut.

18.4.2.1.8. The blade or cutting head will be inspected to see that it is in proper cutting condition, for example, teeth sharp and properly set, no cracks, and free of foreign residue, before starting any job.

18.4.2.1.9. The correct blade will be matched to the work being done, which will aid in avoiding kickbacks and other hazards. The following precautions will be taken:

18.4.2.1.9.1. A crosscut blade will not be used for rip sawing or a ripping blade for crosscutting. Use of the wrong blade requires additional force to feed material and increases the

danger of a slip-of-the-hand mishap, as well as encouraging a kickback. Services hobby shop supervisors will clearly label each saw with a sign or decal, stating which type blade is installed and its uses.

18.4.2.1.9.2. Special blades should be used for such materials as plywood or lumber in which there might be nails or other metal. If warped, twisted-grain, knotty, or frozen lumber must be ripped, a carbide-tipped, controlled-cut blade will be used.

18.4.2.1.10. Operators will not crowd the saw, that is, force the material faster than it can be easily cut. If the saw does not cut a clean, straight line, something is wrong with the saw or the running speed. These conditions are potential sources of mishaps and will be checked and remedied.

18.4.2.1.11. The rip fence will be adjusted only when the saw is turned off and the blade rotation has stopped. To enable the operator to set the rip fence without lifting the saw guard, a permanent line should be marked on the table in front of and in line with the saw blade.

18.4.2.1.12. Hands will be kept out of the line of cut when feeding saws. When there is not enough room for hand movement between the rip fence and saw blade, material will be moved forward with a push stick.

18.4.2.1.13. The hood will not be removed when narrow material is being ripped. Clearance for the hood can be obtained by attaching a filler piece to the table between the rip fence and the saw blade.

18.4.2.1.14. Saw blades will be set no higher than is necessary to cut through the material being worked. One of two acceptable practices will be used: either no more than three teeth will protrude above the material being cut, or not more than one-eighth of an inch of saw blade will protrude above the material being cut.

18.4.2.1.15. Feather boards will be used as side guides and top holddowns on operations, such as rabbeting, grooving, and dadoing, when a blade hood cannot be used. Their comb-tooth or feathered edges are suitable to provide the right kind of pressure to firmly guide the material and prevent it from kicking back. Also, they prevent the operator's hand from moving into the blade.

18.4.2.2. Radial Arm Saws: (OSHA 29 CFR 1910.213)

18.4.2.2.1. Radial saws will be equipped with a hood that encloses the saw blade and the arbor ends. The lower section of the hood will be hinged so it rises and falls, adjusting itself automatically to the thickness of the material as the saw passes through it.

18.4.2.2.2. An antikickback device or hold-down wheel will be installed on saws used for ripping. The device will be adaptable to any thickness of stock to be cut.

18.4.2.2.3. Manually-operated radial saws will be installed so the front of the table is slightly higher than the rear, which should prevent the cutting head from moving forward when the motor is turned on (without touching the moveable saw head). If the saw cutting head moves forward, the operator should first check to make sure the saw blade is not touching the table top. If the saw blade is located correctly, the front of the table should be raised to a height that prevents this movement.

18.4.2.2.4. With the saw turned off, the operator should pull the saw cutting head all the way forward and with the operator's hand on the pull grip and exerting minimal or no force, follow the head back to its original noncutting position. If the movement of the saw has a tendency to drag, is jerky, or requires excessive force, the operator will check the rollers for wear.

18.4.2.2.5. The operator should turn the saw ON and observe that the saw cutting head does not move forward.

18.4.2.2.6. If a sluggish or hesitant movement of the saw is detected during operation, the unit will be turned off and taken out of service until the cause of the malfunction is corrected.

18.4.2.2.7. If at any time the saw rolls or moves out on the arm away from the column unassisted as a result of vibration, the unit will be taken out of service until the cause of the malfunction is corrected.

18.4.2.2.8. The saw will have a positive limit-stop to prevent the saw from traveling beyond the front edge of the table. Since this limits the width of the material that can be cut, it may be necessary to increase the width of the table so the saw can be operated safely the full distance of the arm.

18.4.2.2.9. When the saw is being used to crosscut a board, the operator will pull the saw cutting head forward by hand until the cut is completed, then push the cutting head back easily to its noncutting position. At no time will the operator release the cutting head and let it roll back to the noncutting position by itself.

18.4.2.2.10. Material will be measured by placing the material to be cut against a stop gauge (whenever repeat cuts are required). When it is necessary to measure with a ruler, material will be kept well away from the saw until measuring is completed.

18.4.2.2.11. When ripping with a radial saw is necessary, ripping and ploughing shall be against the direction in which the saw turns. The direction of the saw rotation shall be conspicuously marked on the hood. In addition, a permanent label not less than 1 ½ inches by ¾ inches shall be affixed to bhe rear of the guard at approximately the level of the arbor reading as follows: "Danger: DO NOT RIP OR PLOUGH FROM THIS END" or the nearest commercially available equivalent.

18.4.2.2.12. Stock will not be removed from the table until the saw is returned to its stopped position.

18.4.2.2.13. When making angle cuts or miter cuts, the locking device on the saw head will be securely fastened.

18.4.2.2.14. When crosscutting, the stock will lie solidly on the table and against the back guide.

18.4.2.2.15. Care will be taken to ensure the blade being used is proper for the work being performed.

18.4.2.2.16. When removing short pieces from a table close to the saw blade, the operator will ease the saw back to the idling position and make sure all bouncing has stopped before placing hands on the table. Cylindrical stock will be cut on a radial saw only when it is securely clamped.

18.4.2.3. Band Saws: (OSHA 29 CFR 1910.213)

18.4.2.3.1. Both upper and lower wheels will be completely enclosed on both sides. The enclosures should be capable of being removed easily to permit saw blade maintenance.

18.4.2.3.2. The working part of a saw blade, between the guide rolls and the upper wheel enclosure, will be guarded to prevent accidental contact with the saw blade. The guard will be self-adjusting and attached to the gauge so that, in any position of the gauge, the guard will completely cover the portion of the saw blade between the guide rolls and the upper wheel enclosure.

18.4.2.3.3. Saws should be equipped with an automatic tension control to compensate for the contraction that takes place in the cooling of the blade after a job is finished and to ensure proper tension of the saw blade.

18.4.2.3.4. Feed rolls on self-fed band saws will be guarded to prevent the operator's hands from coming into contact with the in-running rolls at any point.

18.4.2.3.5. The saw speed will not exceed the safe limit recommended by the manufacturer.

18.4.2.3.6. If material binds or pinches on the blade, the operator will not attempt to back the work away from the blade until the machine is turned off and blade motion has stopped.

18.4.2.3.7. If a saw blade should break, the operator will shut off the power, lock the start switch in the OFF position, and not attempt to remove any part of the saw blade until the machine has completely stopped.

18.4.2.4. Jointers: (OSHA 29 CFR 1910.213)

18.4.2.4.1. Each hand-fed planer and jointer with a horizontal or vertical head will be equipped with a cylindrical cutting head, the knife projection of which will not exceed one-eighth of an inch beyond the cylindrical body of the head.

18.4.2.4.2. The opening in the table will be kept as small as possible. The clearance between the edge of the rear table and the cutting head circle or knives will not be more than one-eighth of an inch. The table throat opening will not be more than 2 inches when tables are set or aligned with each other for a zero cut.

18.4.2.4.3. Jointers with front-table-mounted fences will be equipped with an adjustable device to prevent thin stock from slipping laterally under the portion of the fence at the rear of the table.

18.4.2.4.4. An automatic guard will be provided to cover the section of the cutter head near the operator (on the working side of the fence) and to contact the wood to prevent any opening from remaining between the guard and wood during the operation. The guard will cover the section of the cutter head on the nonworking side of the fence, especially when the fence is moved toward the automatic guard. There are two types of automatic guards commonly found on jointers. One type is pushed aside by the material and is referred to as a swing guard. The other type found on some old machines rises to the top of the stock and drops after the material passes beneath it. Each type has some advantages and disadvantages depending on the principal type of operation performed. The swing guard is the most common type. The swing guard is pushed aside by the stock passing over the cutting head and is returned against the fence by a spring after the wood is removed. For surface jointing, the cutter head will be momentarily

exposed as the rear of the stock passes over it. A well-constructed push block will protect an operator's hand at this point. The overhead guard may rise above the material or in some designs will also move to the side of the stock. This guard does impede the use of push blocks.

18.4.2.4.5. The guard over the section of the cutting head on the rear side of the fence will consist of a sliding metal shield that will automatically adjust to the exposed length of the cutter head.

18.4.2.4.6. Whenever power feeders are used, the feeding mechanism will be guarded by a metal shield or hood.

18.4.2.4.7. Because the knife blades on a revolving cutting head produce a thrust forceful enough to pull the stock from an operator's hand, holddown push blocks, jigs, or fixtures will be used.

18.4.2.5. Power Feed Planers: (OSHA 29 CFR 1910.213)

18.4.2.5.1. Guards will be provided for feed rolls, cutting heads, and holddown rolls at the discharge end. Feed rolls will be guarded by a metal strip in front of the rolls under which the material may pass, but which will prevent an operator's fingers from being drawn into the rolls while feeding the machine. Where the top roll is corrugated, the strip should extend over the top of the roll. Cutting heads and discharge rolls will be guarded by a solid metal enclosure of substantial construction. The hood of an exhaust system may form part or all of the enclosure.

18.4.2.5.2. When other than corrugated top-feed rolls are used, an antikickback device will be installed.

18.4.2.5.3. The operator will examine each planer before using it to ensure that knives are not set to take too heavy a cut for one pass.

18.4.2.5.4. Helpers will position themselves where they will not be pinned between the material and an immovable object.

18.4.2.5.5. Operators will be especially careful of their fingers when surfacing a short length of material as the infeed rolls may tip the material up and then down quickly, causing fingers to become pinched between the table top and the material.

18.4.2.6. Shapers: (OSHA 29 CFR 1910.213)

18.4.2.6.1. Shapers will be equipped with a braking device that will bring the cutting head to a stop within 10 seconds after power is shut off. A double-spindle machine will be equipped with separate braking devices.

18.4.2.6.2. A fence will have as small an opening for the knives as possible and will extend at least 18 inches on either side of the spindle.

18.4.2.6.3. Cutting heads will be enclosed by a guard. The guard will not be less than the greatest diameter of the cutter. Attachments of a warning device of leather or other such material to the spindle are not acceptable.

18.4.2.6.4. Whenever possible, holddowns and jigs will be used to limit exposure of hands to cutters.

18.4.2.6.5. When a blade is removed from a spindle for sharpening, or for some other purpose, all other blades will be removed at the same time.

18.4.2.7. Lathes: (OSHA 29 CFR 1910.213)

18.4.2.7.1. Rotating, cutter-type lathes will be provided with a hinged metal shield or hood that completely covers the knives and material when the machine is in operation. Exhaust system hoods may be included as part of the guard if they comply with standard guard designs.

18.4.2.7.2. Automatic lathes will be equipped with a brake that will bring the rotating material to a quick, but not instantaneous, stop after the power is shut off.

18.4.2.7.3. Automatic lathes will be placed with the back side against a wall or barrier to contain knives should they be thrown rearwards.

18.4.2.7.4. Tool rests will be set parallel and as close as possible to the work and high enough so the tools will butt into the wood slightly above the horizontal center of the piece being turned.

18.4.2.7.5. Faceplate type lathes will be provided with a control stop so the operator cannot unintentionally throw the power directly from the normal running direction of rotation into reverse. This will avoid the possibility of the faceplate unscrewing and flying off.

18.4.2.7.6. Lathes used for turning long pieces of material will be equipped with guards that will contain the workpiece if it separates from its anchorage.

18.4.2.7.7. Operators will not stand directly in line with hand-turning tools.

18.4.2.7.8. When sanding, the sandpaper will be held in the fingers and pressed lightly against a small area at the top of the rotating material. This will keep the sandpaper from catching and pulling the operator's hand around the material.

18.4.2.7.9. Poor quality wood will not be used for wood turning.

18.4.2.8. Sanding Machines: (OSHA 29 CFR 1910.213)

18.4.2.8.1. Feed rolls of self-feed sanding machines will be protected with a guard to prevent hands from coming in contact with the in-running rolls at any point.

18.4.2.8.2. Belt sanding machines will be provided with guards at each nip point. These guards will effectively prevent hands or fingers from coming in contact with the nip points. The unused run of the sanding belt will be guarded against accidental contact.

18.4.2.9. Boring and Mortising Machines: (OSHA 29 CFR 1910.213)

18.4.2.9.1. Safety-bit chucks will not have projecting set screws.

18.4.2.9.2. A guard will be provided which will enclose all portions of the bit chuck above the material being worked.

18.4.2.9.3. The top of the driving mechanism will be enclosed.

18.4.2.9.4. If there is a counterweight, one of the following (or equivalent) methods will be used to prevent its dropping:

18.4.2.9.4.1. It will be bolted to the bar by a bolt passing through both the bar and counterweight.

18.4.2.9.4.2. A bolt will be put through the extreme end of the bar.

18.4.2.9.4.3. Where the counterweight does not encircle the bar, a safety chain will be attached to it.

18.4.2.9.4.4. Other types of counterweights will be suspended by chain or wire rope and will travel in a pipe or other suitable enclosure wherever they might fall and cause injury or damage.

18.4.2.9.4.5. Universal joints on spindles of boring machines will be completely enclosed to prevent accidental contact by the operator.

18.4.2.9.4.6. Each table-type boring or mortising machine will be equipped with hold-down devices to keep work securely in place.

18.4.2.10. Tenoning Machines: (OSHA 29 CFR 1910.213)

18.4.2.10.1. Feed chains and sprockets of double-end tenoning machines will be completely enclosed, except for that portion of cabin used for conveying the stock.

18.4.2.10.2. Sprockets and chains will be guarded at the sides by plates projecting beyond the periphery of sprockets and the ends of lugs at the rear ends of frames over which feed conveyors run.

18.4.2.10.3. Each tenoning machine will have cutting heads and saws, if used, covered by metal guards. These guards will cover at least the unused part of the periphery of the cutting head. Where an exhaust system is used, the guard may form part or all of the exhaust hood.

18.4.2.11. Electrical Requirements and Safeguards: (OSHA 29 CFR 1910.213 and 1910.147)

18.4.2.11.1. The motor START switch will be protected against accidental or inadvertent operation. (OSHA 29 CFR 1910.217, *Mechanical Power Presses*)

18.4.2.11.2. All machinery will be installed according to the National Electrical Code (NEC).

18.4.2.11.3. Control switches will be available to workers at their operating positions so they will not need to reach over moving parts of machinery. The stop control switch will be identified by a printed word or color coded red. Controls will not be wedged for continuous operation.

18.4.2.11.4. Machines, which are not adequately safeguarded to protect the worker during an undervoltage situation or a power failure, shall have an undervoltage protective device installed. This device prevents the machine from starting up after a power interruption and in some cases exposing the worker to the hazards of moving parts. Qualified operators following the safe operating practice in paragraph **18.2.4.** The installation ground safety officials and work center supervisors are responsible for identifying those machines that require this protection. (OSHA 29 CFR 1910.213)

18.4.2.11.5. Foot treadle controls shall be protected against unexpected or accidental tripping. These controls shall also have a nonslip surface.

18.4.2.11.6. Exposed noncurrent-carrying metal components that may become energized shall be grounded.

18.4.2.11.7. Before performing maintenance or major adjustments to moving parts that require panels and guards to be removed, all machine energy sources or energy isolating devices shall be locked out and tagged out. AF Form 982 may be used temporarily until the

lockout is accomplished or in conjunction with the lockout (see **Chapter 21**). A machine or other equipment with a simple wall plug as the power source will be unplugged and controlled by the supervisor or operator.

18.4.2.12. Safeguarding by Location or Distance. To safeguard by location, the machine or its dangerous moving parts must be positioned so hazardous areas are not accessible or do not present a hazard to a worker during the normal operation of the machine. This may be accomplished by locating a machine where a building design feature, such as a wall, protects the worker and other personnel. Additionally, enclosure walls or fences can restrict access to machines. Another possible solution is to have dangerous parts located high enough to be out of the normal reach of any worker.

18.4.2.12.1. Before attempting the use of these safeguarding techniques, a thorough hazard analysis of each machine and particular situation is absolutely essential. The supervisor and installation ground safety personnel shall perform this analysis and publish the results. The analysis must clearly identify that workers are protected from dangerous moving parts and one of the restrictions in paragraph **18.4.2.12.** is met.

18.4.2.12.2. Moving parts of machines shall be a minimum distance of 8 feet above the work level, e.g., floor, platform, or passageway.

18.4.2.12.3. Machines shall be in an enclosed area with a locked entrance. The enclosure (wall or fence) shall be at least 8-feet high. The main source of power shall be disconnected and locked in the OFF position when maintenance, service, or major adjustments are made to moving parts with guards and panels removed. The AF Form 982 should be used in conjunction with the lockout, or in place of the lock if lockout is not possible.

18.4.2.13. Safeguarding Devices.

18.4.2.13.1. A safeguarding device that performs one of several functions can be used to replace a guard. It must:

18.4.2.13.1.1. Stop the machine if a body part is inadvertently placed in the danger area;

18.4.2.13.1.2. Restrain or withdraw the operator's hands from the danger area during operation;

18.4.2.13.1.3. Require the operator to use both hands on machine controls, thus keeping both hands and body out of danger; or

18.4.2.13.1.4. Provide a barrier that is synchronized with the operating cycle of the machine in order to prevent entry to the danger area during a hazardous part of the cycle.

18.4.2.13.2. These devices shall be installed, adjusted, and used according to manufacturer's operating and maintenance instructions.

18.4.2.13.3. All hazardous parts not protected by the device must be guarded according to paragraph **18.4.2.14.**

18.4.2.14. Safeguarding by Barrier or Enclosure. These guarding techniques primarily apply to three areas: power transmission apparatus, feeding and ejection areas, and points of operation. Barriers may be fixed, adjustable, or self-adjusting. Enclosure guards are normally fixed. Both types can be equipped with an interlock that prevents the machine from cycling or starting if the

guard is opened or removed. Because the type of operation, size or shape of material, and method of handling vary between machines, the type of barrier or enclosure selected will also vary.

18.4.2.14.1. Every guard must, by design, construction, application, and adjustment:

18.4.2.14.1.1. Prevent hands, fingers, or other body parts from entering into the hazardous areas by reaching through, over, under, or around the guard;

18.4.2.14.1.2. Create no pinch point between the guard and moving machine parts;

18.4.2.14.1.3. Not be easily removable by the worker;

18.4.2.14.1.4. Offer maximum visibility of the point of operation consistent with operational and maintenance requirements; and

18.4.2.14.1.5. Be affixed to the machine. Where possible, they will be of the hinged type to enhance maintenance or adjustments.

18.4.2.14.2. When a point-of-operation guard cannot be used because of unusual shapes or cuts, jigs or fixtures that will provide equal safety for the operator will be used. Upon completion of an unusual operation, the guard will be immediately replaced.

18.4.2.14.3. Whenever a guard is removed for other than an operational requirement, the machine will be shut down and the control switches locked and tagged in the OFF position.

18.4.2.14.4. Whenever possible, enclosure and barrier guards shall be interlocked with the machine control so the machine cannot be activated unless the guard itself or the hinged or movable sections of the guard are in position.

18.4.2.14.4.1. The guard shall prevent the operator from opening the interlocked section and reaching into the point of operation.

18.4.2.14.4.2. Only personnel authorized by the shop supervisor shall make adjustments.

18.4.2.14.4.3. Guards that are interlocked with the machine cycle shall, when opened, stop the related component, interrupt the machine cycle, or shut down the machine. Closing the guard shall not restart the machine cycle except when the guard is designed for that purpose.

18.4.2.14.5. When the periphery of the blades of a fan are less than 7 feet above the floor or working level, the blades will be guarded. The guard will have openings no larger than one-half of an inch in width and depth. The use of concentric rings, with spacing between them not exceeding one-half of an inch, is acceptable providing that radial spokes and firm mountings are used to make the guard rigid enough to prevent it from being pushed into the fan blade. The use of nylon mesh or similar materials with holes not exceeding one-half of an inch to modify a substandard fan guard is acceptable providing the combination of the two provides protection from contact with the blade. The mesh must not be able to be pushed into the fan blade during normal use.

18.4.2.14.6. An enclosure guard provides the greatest degree of protection against moving parts of transmission apparatus. Any enclosure is satisfactory provided it is strong enough to withstand the bumps and pressure imposed on it without collapsing against the mechanism it covers. (OSHA 29 CFR 1910.212 and 1910.219, *Mechanical Power-Transmission Apparatus*)

18.4.2.14.6.1. The guard will be designed and installed so no part of the body can be inadvertently placed in, on, under, or over the edges of the guard where it might contact a moving part. (OSHA 29 CFR 1910.212)

18.4.2.14.6.2. Guards shall be made of expanded metal; perforated or solid sheet metal; or wire mesh, plastic, or other material of equal or greater strength. Material used will be free from burrs or sharp edges. Guards will be fastened to the framework of the machinery. In certain environments where chemical or corrosive operations are performed, it may be necessary for the installation civil engineer, the ground safety officer, or the bioenvironmental engineer (BEE) to determine the best material to be used for guard construction.

18.4.2.14.6.3. The enclosure guard and its supports shall be designed and installed so an adult person leaning on, or falling against, the enclosure will not receive an injury from the moving part.

18.4.2.14.6.4. Where there is a reasonable possibility of the moving part failing and causing injury, the enclosure shall be capable of containing the broken parts. Broken chains, belts, gears, and couplings will throw objects when fracture occurs. Part failure commonly occurs in operations involving frequent starting, stopping, reversing, and cyclic shock or peak loads that exceed normal operational loads. Parts that run at high revolutions per minute (rpm) are potential projectile hazards. When part failure is considered a hazard, the guard filler material will be a solid metallic sheet, plate stock, or casting. Sheet or molded plastics or other non-metallics will not be used unless they have been impact-tested to resist penetration of a specific failing part.

18.4.2.14.6.5. Openings to permit lubrication, adjustment, or inspection will have hinged, sliding, or bolted cover plates that will be closed prior to starting the machine.

18.4.2.14.6.6. Horizontal belts and ropes above floors or platforms will be guarded for their entire length if located over passageways or workplaces, if center-to-center distance between pulleys is 10 feet or more, or if the belt is 8 inches or more in width.

18.4.2.14.6.7. Vertical belts running over a lower pulley above the floor or platform will be guarded at the bottom in the same manner as overhead belts.

18.4.2.14.6.8. Where loose pulleys or idlers are not practical, belt perches in the form of brackets, rollers, etc., will be used to keep idler belts away from the shafts. Perches will be of strong materials and designed for the safe shifting of belts.

18.4.2.14.6.9. Belt dressing should not be applied when the belt or rope is in motion. However, if necessary, it will be applied where belts leave the pulleys, not where they approach them.

18.4.2.14.6.10. Unless the distance to the nearest fixed pulley, clutch, or hanger exceeds the width of the belt used, a guard will be provided to prevent the belt from leaving the pulley on the side where insufficient clearance exists. Where there are overhanging pulleys on a line, jack, or countershaft, with no bearing between the pulley and the outer end of the shaft, a guard to prevent the belt from running off the pulley will be installed.

18.4.2.14.6.11. Pulleys with cracks or pieces broken out of rims will be taken out of service.

18.4.2.14.6.12. Pulleys used in areas where they would be exposed to corrosion will be made of corrosion-resistant material. Pulleys located in corrosive environments will be inspected semiannually to ensure they are in satisfactory condition.

18.4.2.14.6.13. Vibration is a recognized hazard potential, and in installations where components frequently pass through high-vibration levels, there is danger of rotating shafts fracturing. Guards that vibrate at high frequencies can become dislodged from their mountings. Operators and maintenance personnel must pay close attention to the integrity of guards.

18.4.2.14.6.14. Exhaust hoods may serve as guards for the top, bottom, backside, and underside of table saws and the wheels of bandsaws, provided they meet the construction criteria for guards.

18.4.2.15. Related Equipment such as shield and holding tools. While these aids do not give complete protection from machine hazards, they could provide the operator an extra margin of safety. Since these aids are not used instead of the safeguards, sound judgment is needed in their application.

18.4.2.15.1. Shields may be used to provide protection from flying particles.

18.4.2.15.2. Holding tools designed to aid material placement in and out of machinery shall be used when it would otherwise be necessary to place hands in the danger zone. These tools are not to be considered a substitute for guarding required by this or any other machine standard. They will be used to supplement guard protection provided.

18.5. Metal Working Machinery:

18.5.1. Hazards. The primary hazards associated with metalworking machinery are at the point of operation where cutting tools, other machine components, or stock are rotating or cycling at high rates of speed. Lacerations to fingers from being caught in, on, or between the points of operation are the most common injuries. Other hazards that account for a wide variety of injuries, amputations, fractures, punctures, burns, and eye and ear damage are:

18.5.1.1. Slippery floor surfaces from oil and grease leakage and coolant splashing.

18.5.1.2. Flying particles and objects, such as hot and sharp chips, coolant, and dislodged machine and auxiliary parts.

18.5.1.3. Excessive noise level.

18.5.1.4. Exposed gears, belt drives, and clutch mechanisms.

18.5.1.5. Heavy material and auxiliary device movements, e.g., power press dies and lathe chucks.

18.5.1.6. Handling of extremely hot materials.

18.5.1.7. Loose clothing, jewelry, hair, etc.

18.5.1.8. Inadequate lighting.

18.5.2. Requirements:

18.5.2.1. Power Presses. Mechanical power presses come in many different sizes and types, but they all perform the same basic functions, e.g., forming, punching and shearing, or assembling metal or other material. They accomplish these functions by dies or tools mounted to a slide. The slide travels toward and away from a stationary anvil upon which the material is placed. The frame of the press guides the slide's path of travel. The slide's motion is provided through a crankshaft-clutch-motorized flywheel apparatus, for example, the clutch engages, energy is transmitted from the flywheel to the crankshaft, which in turn moves the slide. All power presses are divided into two categories depending on the type of clutches they are equipped with. The two types of clutches are full revolution and part revolution. The full revolution type, once activated, makes one complete revolution of the crankshaft that causes a full cycle of the slide before the clutch can be disengaged. The part revolution type can be disengaged at any point before the crankshaft has a full revolution and full stroke of the slide. Although direct drive presses have no clutch, they can be stopped at any point by de-energizing the drive motor. Therefore, they are considered a part revolution-type press. (OSHA 29 CFR 1910.217, *Appendix D, Nonmandatory Supplementary Information*)

18.5.2.1.1. Supervisors shall ensure either a fixed barrier guard, safeguard device, or combination of both is installed and used on every operation when the opening between the die (tool) and base (anvil) is more than one-fourth of an inch. The functional manager and installation ground safety personnel must approve guarding by location. The use of hand-feeding tools, regardless of size, does not replace a guard or device.

18.5.2.1.2. A guard is the most effective form of protection, if designed and constructed to prevent entry of hands or fingers into the point of operation. They shall not permit a worker to reach through, over, under, or around the guard. If a guard is installed and functions correctly, no other device is required. Following are four of the most common types of guards used on power presses.

18.5.2.1.2.1. A die enclosure guard is a barrier attached to the die shoe.

18.5.2.1.2.2. A fixed barrier guard is a guard attached to the press frame or base (anvil).

18.5.2.1.2.3. An interlocked barrier guard is attached to the press frame and base and has hinged or movable sections. The guard itself or the hinged or movable sections are locked in the closed position. The interlock also prevents opening the guard or the movable sections as long as the slide is in motion. The hinged or movable sections of the guard are intended for infrequent use such as setup or adjustment and not for manual feeding.

18.5.2.1.2.4. An adjustable barrier guard is attached to the press bed, base or die shoe, and requires adjustment for each job or die setup. Personnel authorized by the shop supervisor perform adjustments.

18.5.2.1.3. Since fixed guarding is not always possible due to the nature of an operation, certain devices are acceptable as a means of protection against point-of-operation hazards. When the following devices are properly installed and function properly, no other point-of-operation guarding is required unless the operation is such that a combination of guards or devices is necessary.

18.5.2.1.3.1. A movable barrier or gate device resembles an interlocked barrier guard in appearance since it is interlocked into the press clutch so slide motion cannot be initiated unless the gate is closed. There are two types of gates.

18.5.2.1.3.1.1. Type A gate must enclose the point of operation before a stroke can be initiated and remain closed as long as the slide is moving.

18.5.2.1.3.1.2. Type B gate prevents entry only during the downstroke and must prevent access prior to the start of the motion or die closure.

18.5.2.1.3.2. Pull-out devices consist of operator wristbands connected by cords and linkage to the slide or upper die so, when the die descends, the operator's hands will be automatically withdrawn from the point of operation if the worker has not already withdrawn them. Closer supervision is required to ensure their use and proper alignment.

18.5.2.1.3.3. Holdout or restraint devices consist of attachments for each of the operator's hands. These devices are securely anchored and adjusted to prevent the operator from reaching into the point of operation at any time.

18.5.2.1.3.4. Presence-sensing devices are restricted for use only on part revolution clutch presses. A presence-sensing device is a light curtain or other type sensing field between the operator and the point of operation interlocked into the control system so slide motion is prevented or stopped prior to die closure if the operator's hands or any part of the body is within the sensing field. Areas not protected by the presence-sensing devices must be guarded. **NOTE:** Presence-sensing devices shall not be used on machines using full revolution clutches, e.g., power presses, or used as a tripping means to initiate motion.

18.5.2.1.3.5. Sweep-type devices cannot be used as a single safeguard for point-of-operation guarding. These devices consist of single or double arms or rods attached to the slide of the presses to push the operator's hands away from the point of operation as the slide descends.

18.5.2.1.4. Two-hand control devices are normally used on presses with a part revolution clutch. The operator must depress two buttons concurrently to initiate slide motion. The buttons must be depressed continuously (holding time) on the downstroke or else the clutch is disengaged, the brake is applied, and the slide stops.

18.5.2.1.4.1. Two-hand trip devices, once pressed, do not have to be held during the downstroke, and the slide will stop only after it has completed a full cycle. The device is generally applicable to full revolution clutch presses.

18.5.2.1.4.2. In addition to proper design, installation, and correct operation, two-hand trips and presence-sensing devices shall be located far enough away from the point of operation (depending on the stopping time of the press) that when operators release the control buttons or disturb the presence-sensing field, they do not have time to reach into the point of operation before the die closes or slide stops.

18.5.2.1.4.3. A control reliability system detects a failure within the controls and prevents initiation of a successive stroke until the failure is corrected.

18.5.2.1.4.4. A brake monitor system monitors the performance of the brake on each stroke and automatically prevents the activation of a successive stroke if the stopping time or braking distance has deteriorated beyond the predetermined safe stopping distance.

18.5.2.1.4.5. Safeguarding devices such as two-hand controls, presence-sensing device, type B gate, or movable barriers allow the operator to feed or remove parts by placing one

or both hands in the point of operation. Therefore, when these devices are used on part revolution clutch presses, the control reliability system and brake monitor system are required to ensure operators' safety from the point-of-operation hazard.

18.5.2.1.4.6. The energy controls shall be isolated by a lockout device and safety blocks installed during machine repairs or alterations of the die area.

18.5.2.1.4.7. Single or dual hand-lever-operated power presses will be equipped with a spring latch on the operating lever to prevent premature or accidental tripping.

18.5.2.1.4.8. The operating levers on hand-tripped machinery with more than one operating station will be interlocked so the machine can only be tripped when all levers are actuated concurrently.

18.5.2.1.4.9. A means of selecting OFF, INCH, SINGLE STROKE, or CONTINUOUS modes of operation (as applicable) will be integrated with the clutch and (or) brake control to govern the operation mode of the presses.

18.5.2.1.4.10. During the inch operating mode, exposure of the worker's hands to the point of operation will be protected by one of the following:

18.5.2.1.4.10.1. Requiring the concurrent use of both hands to actuate the clutch; or

18.5.2.1.4.10.2. Use of a single control protected against accidental actuation. **NOTE:** The control will be located so the worker cannot reach into the point of operation while actuating the control.

18.5.2.1.4.11. Two-handed controls for single-stroke press machines will ensure safe operation by design, construction, and (or) separation so:

18.5.2.1.4.11.1. The concurrent use of both hands is required to trip the press.

18.5.2.1.4.11.2. Machine adjustment can be made, but the concurrent use of both hands is required during the die closing portion of the stroke.

18.5.2.1.4.11.3. Repetitive operation is not possible unless the controls are activated in proper sequence. The control systems will require that all operators' hand controls are released before an interrupted stroke can be resumed.

18.5.2.1.4.12. Individual operator's two-hand trip controls will be designed and constructed to require the use of both hands to protect against unintentional operation. A control arrangement requiring concurrent operation of both the individual operator's hand controls will be used. Bypass of control interlocks is prohibited.

18.5.2.1.4.13. Two-hand trip systems on full-revolution-clutch machines shall provide anti-repeat protection for operators. When two-hand trip systems are used on multiple operator machines, each operator will have a separate set of controls.

18.5.2.1.4.14. Picks, pliers, tongs, and other handfeeding tools required for the safe handling of stock, dies, or materials shall be provided to the operators to supplement other guards. These tools will not eliminate the need for required protective clothing, equipment, or machine guarding. Additionally, a die setter's safety bar will be used for turning the flywheel when the power is off.

18.5.2.1.4.15. As an alternative or supplement to other guarding methods, individual die guards shall be attached to the die shoe, stripper, or die block in a fixed position. They will be designed so the operator cannot reach over, under, or around the guard into the danger zone.

18.5.2.1.4.15.1. Attachment points will be provided on dies requiring mechanical handling.

18.5.2.1.4.15.2. Die stops or other means will be used on inclined presses to prevent inadvertent movement of the die while setting or removing them.

18.5.2.2. Hydraulic Press. Hydraulic power presses shall be safeguarded to prevent the operator's hands from being placed between the dies during press cycling. The types of safeguards used include safeguarding by location or distance (paragraph **18.4.2.13.**), safeguarding by device (paragraph **18.4.2.13.**), and safeguarding by barrier or enclosure (paragraph **18.4.2.14.**).

18.5.2.2.1. Ensure controls meet the requirements of paragraphs **18.5.2.16.** and **18.5.2.16.** The following additional features apply to hydraulic press controls.

18.5.2.2.1.1. When two-hand control systems are installed, they shall incorporate an anti-repeat feature.

18.5.2.2.1.2. A Stop and Auto Return switch, when provided, shall be color-coded yellow. Since it does not deactivate power or other controls, a power disconnect or Stop switch, capable of being locked, shall be provided.

18.5.2.2.2. Control energy sources as referenced in paragraph **18.4.2.11.**

18.5.2.2.2.1. Ensure pneumatic and hydraulic systems meet the requirements of paragraph **18.5.2.19.**

18.5.2.2.2.2. Refer to paragraph **18.5.2.22.** for requirements on safeguarding hydraulic presses that are equipped with automatic material clamping equipment.

18.5.2.3. Press Brakes. The design and construction of a press brake are different from other ram function metalworking machines. The bed and ram, which are longer than other machines, are located in front of and extend beyond the machine's frame. This permits a much larger working area. Press brakes can be hydraulic or mechanical and are classified as either general purpose or special purpose. The operators for both types of machines control the speed of the ram. One worker operates general machines.

18.5.2.3.1. Controls shall meet the requirements of paragraphs **18.5.2.15.** and **18.5.2.16.**

18.5.2.3.2. Energy sources shall be controlled as referenced in paragraph **18.4.2.11.**

18.5.2.3.3. Pneumatic and hydraulic systems shall meet the requirements of paragraph **18.5.2.19.**

18.5.2.3.4. Safeguarding the point of operation will depend on the operation being performed. Proper safeguarding must be planned and installed by someone knowledgeable of both press brakes, in general, and the specific operation. A point-of-operation device (paragraph **18.4.2.13.**) or a point-of-operation barrier or enclosure (paragraph **18.4.2.14.**) will guard the point of operation. Guarding by a safe distance (for example, maintaining a safe distance between the point of operation and a worker's hand and fingers as he or she supports the stock)

can only be used when barriers, enclosures, or devices are not possible. The functional manager must approve guarding by safe distance. The supervisor shall ensure safeguards are available and used on either type of machine. The operator must select and use and proper guarding system for the material and work being performed. The following requirements will be used based upon the type of safeguard available and installed for the operation:

18.5.2.3.4.1. Safeguarding by Distance or Location—paragraph **18.4.2.12.**;

18.5.2.3.4.2. Safeguarding by Device—paragraph **18.4.2.13.**;

18.5.2.3.4.3. Related Tools—paragraph **18.5.2.20.**;

18.5.2.3.4.4. Safeguarding of Power Transmission Equipment—paragraph **18.5.2.21.**; and

18.5.2.3.4.5. Powered Clamping, Working Holding Devices—paragraph **18.5.2.22.**

18.5.2.4. Shapers, Forming Rolls, Calenders, and Cold Headers:

18.5.2.4.1. Controls shall meet the requirements of paragraphs **18.5.2.15.** and **18.5.2.16.**

18.5.2.4.2. Energy sources shall be controlled as referenced in paragraph **18.4.2.11.**

18.5.2.4.3. All pneumatic and hydraulic components shall be designed and maintained to meet paragraph **18.5.2.19.** requirements.

18.5.2.4.4. The primary function of safeguards on these machines shall be to protect the operator's hands, fingers, and other body parts from contacting the point of operation and slide mechanisms. Adjustable barrier or enclosure safeguards will be used to the maximum extent possible. Safeguarding by location or distance should not be considered for these machines because of the frequent operations requiring the worker to hold the workpiece. Regardless of the type selected, the requirements of paragraphs **18.4.2.13.** and **18.4.2.14.** will be used in evaluating the safeguard.

18.5.2.4.4.1. The rear of the reciprocating ram will be guarded to protect other employees. Additional barrier guards shall be provided at the refuse drop areas.

18.5.2.4.4.2. A chip guard will be provided to prevent flying chips from striking the operator or other workers. **NOTE:** All material will be securely clamped in position on the machine table.

18.5.2.5. Shears. There are two types of shears used in metalworking shops: powered and mechanical. Since both types perform the same basic function, safeguarding requirements for point of operation, movable parts, pinch points, and scrap deposit areas are also the same. Safeguarding shall be provided to protect the operators from the hazardous areas.

18.5.2.5.1. Controls shall meet the requirements of paragraphs **18.5.2.15.** and **18.5.2.16.**

18.5.2.5.2. Energy sources shall be controlled as referenced in paragraph **18.4.2.11.**

18.5.2.5.3. Pneumatic and hydraulic systems shall meet the standards of paragraph **18.5.2.19.**

18.5.2.5.4. Barrier or enclosure guarding shall be considered the primary means of safeguarding shearing machines. Location or distance safeguarding may be considered but is normally not applicable due to the varying operations performed on shearing machines—paragraphs **18.4.2.13.**, **18.4.2.14.**, and **18.5.2.20.** through **18.5.2.22.** shall be used to evaluate the adequacy of installed guards or devices. The area where sheared or punched refuse drops will be barri-

caded to prevent injuries to operators and helpers. Subject machines will be equipped with an emergency stop control. (Refer to paragraph **18.5.2.18.** for requirements.)

18.5.2.6. Lathes, Screw/Bar, and Chucking Machines. The point of operation does not normally require protection for a lathe, single-spindle screw/bar, or chucking machine when operating in the manual mode. However, multiple-spindle machines are normally equipped with enclosures that isolate the point of operation from the operator. Additional hazard areas of all machines and operations that require safeguarding include powered work-holding devices, powered turrets, and controls and operations where workpieces extend beyond the confines of the workspace.

18.5.2.6.1. Controls shall meet the requirements of paragraphs **18.5.2.15.** and **18.5.2.16.**

18.5.2.6.2. Energy sources shall be controlled as referenced in paragraph **18.4.2.11.**

18.5.2.6.3. Pneumatic and hydraulic systems, when installed, shall meet the paragraph **18.5.2.19.** standards.

18.5.2.6.4. A fixed or movable barrier device or awareness device shall be installed when a lathe operates in the automatic or semi-automatic mode and a tool trapping space is created by the automatic advancing of rotating and nonrotating components.

18.5.2.6.5. Power-indexed turrets containing an exceptionally long tool or tool-holding device that extends in the operator's workspace, shall have a barrier guard, rigid awareness barrier (protective railing), or awareness device installed during machine operation. One of these safeguards shall also be installed when a rotating workpiece extends beyond the normal confines of the machine. Guards or devices are not required when tracing is being performed and the operator must initiate each cycle.

18.5.2.6.6. All lathes procured after the date of this standard shall be equipped with a spindle braking device if the operator must stop the spindle to manually unload a workpiece.

18.5.2.6.7. Chucks will always be started on the lathe spindle by hand.

18.5.2.6.8. The tail stock end of the work will be countersunk deeply enough so there is minimal chance of the work being torn loose.

18.5.2.6.9. Tools will be adjusted in the tool rest so they are slightly above the center to keep the work from climbing. An exception is threadcutting where the tool should be at center.

18.5.2.6.10. Chips that are in the process of being generated, such as long stringy chips, shall not be removed by hand. A tool, puller, brush, or shovel shall be used.

18.5.2.6.11. Operators will not attempt to brake the lathe by grasping the chuck, work, or any other machine component.

18.5.2.7. Drilling, Milling, and Boring Machines. A barrier guard or guarding device shall be installed and used when machines are operated in an automatic or semi-automatic mode, cutting devices are exposed, and any part of the operator's body is within 1 foot of the cutting device. Awareness barriers can also be used; however, only in situations when a guard or guarding device would, of itself, present a hazard. Point-of-operation and tool-trapping space guarding is not required when machines are operated in the manual mode. The type of guarding will depend on the machine, location, and operation. Additionally, shields may be required to protect workers from chips and splashing coolant. The requirements identified in paragraph **18.5.2.20.** shall apply

to the design and installation of shields. Additionally, the following requirements for guards, machine components, and operations apply.

18.5.2.7.1. Operators shall not hand-hold stock while using these machines. When the cutting tool contacts the stock or workpiece, it can catch or twist the material from the operator's grasp. The resulting uncontrolled rotation of the stock will cause injury to the operator. A hold-down fixture or stock vise shall be used to prevent these injuries.

18.5.2.7.2. Drill chucks shall not have protruding set screws.

18.5.2.7.3. Auxiliary devices, e.g., index heads, vises, drill or boring bits, and extra tools, should be properly stored.

18.5.2.7.4. Drill presses will not be operated at a speed greater than specified by the press or drill manufacturer for the particular material to be drilled.

18.5.2.7.5. Automatic and high production drilling machines will be equipped with barricades or enclosures to separate operators and other personnel from drilling operations. When steps or stairs are necessary for making adjustments to the machine or work, they should be well constructed, provided with nonslip treads, and in good repair.

18.5.2.7.6. Controls shall meet the criteria of paragraphs **18.5.2.15.** and **18.5.2.16.**

18.5.2.7.7. Energy sources shall be controlled as referenced in paragraph **18.4.2.11.**

18.5.2.7.8. When provided, pneumatic and hydraulic systems shall conform to paragraph **18.5.2.19.**

18.5.2.8. Planers. The reciprocating work and table will be barricaded, or enclosed, to prevent personnel from being struck by material that is turning against the cutter.

18.5.2.8.1. A chip shield will be provided to prevent chips from flying and striking the operator or other workers.

18.5.2.8.2. Safety dogs will be placed at each end of the planer table to prevent the table from running off the gear rack.

18.5.2.8.3. All material will be securely clamped in position on the planer table.

18.5.2.9. Saws. Safeguarding of metalworking saws varies depending on the type of machine and material being processed. The general requirements of paragraphs **18.5.2.15.** through **18.5.2.18.4.** apply to all saws. The following paragraphs address the three most common types of saws used in Air Force shops. For saws not covered, the supervisor and installation ground safety personnel shall develop requirements on machine safeguards. (ANSI Standard B11.10, *Metal Sawing Machines*.)

18.5.2.10. Bandsaws:

18.5.2.10.1. Both upper and lower wheels will be completely enclosed on both sides. The enclosures should be easily removed to permit saw blade maintenance.

18.5.2.10.2. The working part of a saw blade, between the guide rolls and the upper wheel enclosure, will be guarded to prevent accidental contact with the saw blade. The guard will be self-adjusting and attached to the gauge so that, in any position of the gauge, the guard will

completely cover the portion of the saw blade between the guide rolls and the upper wheel enclosure.

18.5.2.10.3. Saws will be equipped with an automatic tension control to compensate for the contraction that takes place in the cooling of the blade after a job is finished and to ensure proper tension of the saw blade.

18.5.2.10.4. Feed rolls on self-fed bandsaws will be guarded to prevent the hands of the operator from coming into contact with the in-running rolls at any point.

18.5.2.10.5. The saw speed will not exceed the safe limit recommended by the manufacturer.

18.5.2.11. Hacksaws:

18.5.2.11.1. Loss of coolant and lubricants from a power hacksaw shall be minimized by proper maintenance of the coolant system and the installation of splash shields.

18.5.2.11.2. Vises, fixtures, and other work-holding equipment shall be used to hold the workpiece securely.

18.5.2.11.3. Stock being cut by a power hacksaw will not be hand-held.

18.5.2.12. Circular Metal Saws:

18.5.2.12.1. The safeguard shall be of sufficient strength to protect the operator from a broken saw blade or teeth.

18.5.2.12.2. It shall enclose the spindle end and nut.

18.5.2.12.3. It shall be provided with an opening or means of removing chips that, in itself, will not create a hazard to the operator.

18.5.2.12.4. It shall enclose all unused portions of the exposed saw blade. The part of the blade used for cutting shall be protected by a barrier. The barrier shall be positioned to protect the operator from exposure to the blade.

18.5.2.12.5. Loss of coolant and lubricants from the machine shall be minimized by proper maintenance of the coolant system and the installation of splash shields.

18.5.2.12.6. Vises, fixtures, and other work-holding equipment shall be used to hold the workpiece securely.

18.5.2.12.7. All circular sawing machines shall be equipped with a pair of flanges or blotter where required.

18.5.2.13. Cut-Off and Contour Saws:

18.5.2.13.1. Both the upper and lower wheels on both sides of saws will be enclosed. The enclosure should be hinged to permit easy access to the saw blade.

18.5.2.13.2. The working part of the saw blade, between the guide rolls and the upper wheel enclosure, will be guarded to prevent accidental contact with the saw blade. The guard will be self-adjusting and will be attached to the gauge so that, in any position of the gauge, the guard will completely cover the portion of the saw blade between the guide rolls and the upper wheel enclosure.

18.5.2.13.3. Abrasive cut-off saws will be connected to an exhaust system.

18.5.2.13.4. Stock being cut by a cut-off or contour saw will not be hand-held.

18.5.2.14. Riveting Machines. A guard will be provided to prevent the operators from placing their hands between dies.

18.5.2.15. Operator Controls:

18.5.2.15.1. Controls shall be within easy reach of the machine operator. They shall be placed so the worker does not have to reach past moving parts that may cause injury.

18.5.2.15.2. Controls shall be positioned or protected against accidental or inadvertent operation. (OSHA 29 CFR 1910.217)

18.5.2.15.3. Controls shall not be wedged for continuous operation.

18.5.2.15.4. Controls shall be clearly identified when their function is not self-evident. They shall not initiate any motion unrelated to its designation.

18.5.2.15.5. Jog circuits, if used, shall be designed to prevent continuous run or automatic operation.

18.5.2.15.6. Foot (treadle) controls shall be protected against unexpected and accidental tripping. These controls shall have a nonslip surface.

18.5.2.15.7. Energy sources shall be controlled as referenced in paragraph **18.4.2.11.**

18.5.2.16. Mechanical Controls:

18.5.2.16.1. Handwheels that are turned in a clockwise rotation shall produce for the controlled component a linear movement to the right, away, or upward. If rotary motion is produced by the handwheel, clockwise rotation shall cause clockwise movement of the controlled component.

18.5.2.16.2. Control levers shall move in the same direction as the controlled component when both motions are parallel.

18.5.2.16.3. When crank and handwheel controls with protrusions rotate at more than 50 surface feet per minute, they shall have an adjustable barrier guard installed.

18.5.2.17. Multiple Control Stations:

18.5.2.17.1. When a setup control station is provided in addition to the normal operator's control station, selection of the setup station shall render the operator's station inoperative, except for emergency stop. Switching from one control station to another shall not create a hazard.

18.5.2.17.2. When more than one operator is required to operate the machine from different control stations, each station shall be provided with a cycle start button that must be depressed concurrently in order to initiate the cycle.

18.5.2.17.3. When one operator can operate the machine from more than one station, all cycle start buttons other than the one being used shall be made inoperative.

18.5.2.17.4. Where parts are manually loaded and the operator may be exposed to a hazard due to cutter or machine table movements, the rapid traverse from one part or position to the other shall be initiated by the operator.

18.5.2.18. Emergency Stop Control:

18.5.2.18.1. All machines shall incorporate one or more emergency stop controls that, upon momentary operation, shall de-energize all machine motions. These emergency stops shall be located at each operator control station and, if inherent hazards are present at other operating positions, an emergency stop should be provided.

18.5.2.18.2. The emergency stop shall be color coded red.

18.5.2.18.3. The emergency stop control shall override all other controls and, when actuated, not create other hazards.

18.5.2.18.4. All machine motions stopped by the emergency or master switch shall be restartable only by deliberate action by the operator.

18.5.2.19. Pneumatic and Hydraulic Systems:

18.5.2.19.1. Circuits shall be designed and components selected, applied, and adjusted so loss of control media (fluid, air, etc.) will not cause a hazard.

18.5.2.19.2. Circuits shall be designed and components applied so pressure variations will not cause a hazard.

18.5.2.19.3. Components shall be used that cannot be adjusted outside the safe working range of the circuit.

18.5.2.19.4. Means shall be provided to prevent operation when loss of working pressure could cause a hazard.

18.5.2.19.5. Circuits employing accumulator tanks shall automatically vent the accumulator pressure or isolate the accumulator when the machine is shut off.

18.5.2.19.6. Nonvented accumulators shall be identified with a sign that says “WARNING PRESSURIZED VESSEL” or the nearest commercially available equivalent. Charging and discharging information for proper servicing of nonvented accumulators shall be given on or near the accumulator (in a visible location) and in the maintenance manual.

18.5.2.19.7. Gas-charged accumulators operating above 200 pounds per square inch, gauge (psig) charging pressure shall be charged with inert gas.

18.5.2.19.8. Flexible hoses shall be arranged so they will not create a tripping hazard. Where failure of flexible hoses may constitute a whipping hazard, they shall be restrained or contained.

18.5.2.19.9. Whenever pressure is maintained after power is off, such as in counterbalance or accumulator circuits, a warning plate shall be used and procedures for depressurizing the circuit shall be **NOTED:** in the maintenance manual.

18.5.2.20. Related Equipment. While these aids do not give complete protection from machine hazards, they could provide the operator an extra margin of safety. Since these aids are not used instead of the safeguards, sound judgment is needed in their application.

18.5.2.20.1. Shields may be used to provide protection from flying particles. When chips or coolant fluids are splashed on the operator or on the work area and passageway floor, a splash shield shall be installed.

18.5.2.20.2. Holding tools designed to aid material placement in and out of machinery shall be used when it would otherwise be necessary to place hands in the danger zone. These tools are not to be considered a substitute for guarding required by this or any other AFOSH standard. They will be used to supplement guard protection provided.

18.5.2.20.3. Awareness barriers do not provide physical protection, but serve only to remind a person that he or she is approaching the danger area. Generally, awareness barriers are not considered adequate where continual exposure to the hazard exists.

18.5.2.21. Transmission Belts and Pulleys:

18.5.2.21.1. Horizontal belts and ropes above floors or platforms will be guarded for their entire length if located over passageways or workplaces, if center-to-center distance between pulleys is 10 feet or more, or if the belt is 8 inches or more in width.

18.5.2.21.2. Vertical belts running over a lower pulley above the floor or platform will be guarded at the bottom in the same manner as overhead belts.

18.5.2.21.3. Where loose pulleys or idlers are not practical, belt perches in the form of brackets, rollers, etc., will be used to keep idler belts away from the shafts. Perches will be of strong materials and designed for the safe shifting of belts.

18.5.2.21.4. Belt dressing should not be applied when the belt or rope is in motion. However, if necessary, it will be applied where belts leave the pulleys, not where they approach them.

18.5.2.21.5. Unless the distance to the nearest fixed pulley, clutch, or hanger exceeds the width of the belt used, a guard will be provided to prevent the belt from leaving the pulley on the side where insufficient clearance exists. Where there are overhanging pulleys on a line, jack, or countershaft, with no bearing between the pulley and the outer end of the shaft, a guard to prevent the belt from running off the pulley will be installed.

18.5.2.21.6. Pulleys with cracks or pieces broken out of rims will be taken out of service.

18.5.2.21.7. Pulleys used in areas where they would be exposed to corrosion will be made of corrosion-resistant material. Pulleys located in corrosive environments will be inspected semi-annually to ensure they are in satisfactory condition.

18.5.2.22. Powered Clamping, Work Holding Devices. These shall be provided with a safeguard to warn the operator or contain the workpiece when there is a lack of clamping pressure. An electrical interlock can be installed which shuts down power to the lathe when hydraulic pressure drops or electrical interruption occurs. A retaining cover or barrier guard can also be used. Another method for protecting personnel is an audible or visual warning device that shall be visible or audible to the operator at his normal work position.

18.6. Permanently Installed Grinding Machines:

18.6.1. Hazards and Human Factors:

18.6.1.1. Hazards. Personnel injuries and property damage can result from the improper use, care, or storage of abrasive wheels and associated equipment. Material failure hazards include:

18.6.1.1.1. Improper mounting of wheels to machinery; excess pressure on work surface causing heat and vibration that leads to abrasive wheel deterioration or destruction; use of wheels

at speeds greater than manufacturer's ratings; improper storage practices causing damage to wheels; wires expelled from brush wheels; particles ejected or thrown from the material being worked; and vibration that may burst wheels or disks.

18.6.1.1.2. Procedural hazards include: holding the work incorrectly; using the wrong type of wheel; grinding on the side of the wheel that is not designed for side wheel grinding; taking too heavy a cut; applying work too quickly to a cold wheel or disk; grinding too high above the center of a wheel; failing to use wheel washers (blotters); incorrectly adjusting or lacking a work rest; using spindles of incorrect diameter or with the threads cut so the nut loosens as the spindle revolves; installing flanges of the wrong size, with unequal diameters, or unrelieved centers; or dressing of wheels incorrectly, resulting in off-center conditions or fracture strains.

18.6.1.2. Human Factors. Worker and supervisor attitudes and attentiveness are important factors in working safely with abrasive wheel machinery. Monotony and fatigue interact when repetitive work is performed over a long period of time. Exposure to noise, heat, dust, and vibration is frequently present. Constant operator attention is essential. Some of the human factors related situations and mishaps associated with abrasive wheel operations are:

18.6.1.2.1. Eye and face injuries when face shields or goggles are not used in addition to the shield mounted on the grinder.

18.6.1.2.2. Injury to body parts when contact is made with revolving wheels or unguarded moving parts, with monotony and fatigue as contributing factors.

18.6.1.2.3. Respiratory problems caused by inhalation of abrasive wheel dust and failure to use face respirators where required.

18.6.1.2.4. Hearing loss caused by exposure to noise in excess of threshold limit values and failure to use hearing protection devices supplied for this purpose.

18.6.2. Requirements:

18.6.2.1. Exhaust Ventilation. Wherever dry grinding, polishing, or buffing is performed and employee exposure (without regard to the use of respirators) exceeds permissible exposure limits, a local exhaust ventilation system shall be provided and used to maintain employee exposures within permissible exposure limits, (OSHA 29 CFR 1910.94, *Ventilation*). The installation BEE will determine whether exhaust ventilation is needed. When required, exhaust systems will conform to the criteria in AFOSH Standard 161-2.

18.6.2.2. Wheel and Spindle Speeds:

18.6.2.2.1. The spindle rpm of grinders shall be shown on the machine in a location readily visible to the operator. It is the supervisors responsibility to verify the speed of the wheel spindle to ensure that the speed is correct for the size and type of wheel used. (ANSI Standard B11.9, *Safety Requirements for the Construction, Care, and Use of Grinding Machines*)

18.6.2.2.2. All grinding wheels shall have the operating speed affixed to the wheel. Those without a rating will be tagged and removed from service until the rpm rating is validated.

18.6.2.3. Safe Operating Procedures:

18.6.2.3.1. Abrasive wheel machines will not be operated unless safety guards are installed as outlined in paragraph **18.5.2.6.** except wheels used for internal work where the work offers

protection. See **Figure 18.2.** for types 16, 17, 18, 18R, and 19 cones, plugs, and threaded hole pot balls are examples of those not requiring guards while used for internal work. (OSHA 29 CFR 1910.215, *Abrasive Wheel Machinery*)

18.6.2.3.2. Peripheral protectors, commonly referred to as tongue guards, shall be positioned so the opening between the wheel and the guard is no more than one-fourth of an inch. (Refer to paragraph **18.5.2.6.** for additional information on tongue guards.) (OSHA 29 CFR 1910.215)

18.6.2.3.3. Work rests shall be used during all off-hand grinding operations. They shall be of rigid construction and designed to be adjustable to compensate for wheel wear. (OSHA 29 CFR 1910.215)

18.6.2.3.3.1. Adjust these devices closely to the wheel with a maximum opening of one-eighth of an inch to prevent the work from being jammed between the wheel and the rest. Jamming of the work piece could break the wheel and cause personnel injury. Work rests shall be securely clamped after each adjustment and the adjustment shall not be made with the wheel in motion. In those instances where jamming or contact with a grinding wheel is precluded by the size of the work piece, a side guard offers sufficient protection to the operator. Accordingly, in such situations, the requisite to have a work rest adjusted to a maximum opening of one-eighth of an inch is not obligated. However, the work rest clearance will not exceed the width of the work piece. (OSHA 29 CFR 1910.215)

18.6.2.3.3.2. Do not grind stock that is thin enough to be pulled between the work rest and the wheel.

18.6.2.3.4. Machines will be operated within rated speeds at all times. (OSHA 29 CFR 1910.215)

18.6.2.3.5. Wheels found defective, cracked, or out of balance will be taken out of service until repaired or discarded. Wheels shall be removed from service when they are worn to a size that would allow the flange assembly to contact the piece being ground or the work rest.

18.6.2.3.6. The operator will stand to one side whenever grinding machines are initially turned on, until the wheel has reached its operating speed, and when going from operating speed to the stopped position.

18.6.2.3.7. The machine should be stopped and inspected to determine the cause of chattering or vibration.

18.6.2.3.8. Abrasive grinding wheels will not be used to grind aluminum, brass, copper, or other soft metals unless the wheel is specifically designed for that purpose. Soft metal wheels will be used to grind soft metals only.

18.6.2.3.9. Side wheel grinding will be accomplished only on wheels designed for that purpose.

18.6.2.3.10. Operators will ensure that grinders, buffers, and wire brush machines are turned off when work is completed or before leaving the vicinity of the machine.

18.6.2.3.11. Machine operators will not wear loose-fitting clothing that may become entangled in moving parts or power transmission apparatus.

18.6.2.3.12. The type of PPE required for abrasive grinding operations is dependent on the material being processed. As a minimum, operators will wear the proper eye and face protection (e.g., face shield, goggles, or spectacles) identified in **Chapter 14**. Shop aprons of heavy construction should be worn when operations are performed on a continuing or prolonged basis. Gloves should be worn when burrs or rough edges present a hazard to the worker's hands.

18.6.2.3.13. Wire brush wheel operators shall wear protective aprons of heavy construction and a face shield. Care must be exercised when gloves are used to ensure they are not snagged by the rotating brushes and pulled into the wheel.

18.6.2.3.14. Polishing and buffing wheel operators shall wear face shields.

18.6.2.4. Inspections. Grinding machines will be inspected prior to use. The following minimum items will be checked unless manufacturer's instructions require more stringent inspection criteria.

18.6.2.4.1. Work rest for security and proper adjustment, e.g., one-eighth of an inch maximum opening.

18.6.2.4.2. Wheels for security and condition, e.g., cracks, gouges, chipped edges, or uneven wear.

18.6.2.4.3. Wheels for evidence of side grinding or grinding of soft metals when the wheels are not designed for these purposes.

18.6.2.4.4. Shatter-resistant transparent shields for cleanliness, scoring, and proper placement.

18.6.2.4.5. Machine guards and power transmission guards for condition, security, and proper alignment.

18.6.2.4.6. Periphery (tongue) guards for security and proper adjustment, e.g., one-fourth of an inch maximum opening.

18.6.2.4.7. Proper lighting at point of operation.

18.6.2.5. Maintenance and Lubrication. Maintenance on grinding equipment shall not be accomplished until the machine power source is turned off and locked out or the power cord is unplugged.

18.6.2.5.1. Wheel Mounting. Incorrect mounting of an abrasive wheel is responsible for much wheel breakage. Compression forces, radial forces, and grinding heat cause stresses around the central hole of the wheel. It is most important that manufacturer's recommendations concerning size and design of mounting flanges and mounting techniques be followed prior to any maintenance.

18.6.2.5.1.1. Operating Speed. Before mounting the wheel, check the spindle speed of the machine to ensure it does not exceed the maximum operating speed marked on the wheel. (OSHA 29 CFR 1910.215)

18.6.2.5.1.2. Shelf Life. Check that the shelf life requirements of the wheel have not been exceeded (if applicable).

18.6.2.5.1.3. Inspection. Visually inspect and perform a ring test on wheels. Defects such as broken, chipped, or gouged wheels can be easily detected, but cracks are frequently not

visible to the naked eye. Tap wheels gently with a light nonmetallic implement such as the handle of a screwdriver for light wheels, or with a wooden mallet for heavier wheels. If they sound dead, a crack exists. Do not use them. This procedure is known as a ring test and is performed as follows: (OSHA 29 CFR 1910.215)

18.6.2.5.1.3.1. Ensure wheels are dry and free from sawdust when performing the ring test, otherwise they do not ring clear. Organic bonded wheels do not emit the same clear metallic ring as do vitrified and silicate wheels. (OSHA 29 CFR 1910.215)

18.6.2.5.1.3.2. Tap wheels about 45 degrees at each side of the vertical centerline and about 1 or 2 inches from the periphery. Then rotate 45 degrees and repeat the test. A sound and undamaged wheel will give a clear ring. If cracked, there will be a dead sound. (OSHA 29 CFR 1910.215)

18.6.2.5.1.4. Arbor Size. Ensure grinding wheels fit freely on the spindle and remain free under all grinding conditions. Proper clearance between the wheel arbor hole and the machine spindle is essential to avoid excessive pressure due to mounting and spindle heat expansion. (OSHA 29 CFR 1910.215)

18.6.2.5.1.5. Surface Condition. Ensure all contact surfaces of wheels, blotters, and flanges are flat and free of foreign matter. Uneven mounting pressure against the side of a wheel causes stress that could lead to wheel failure. (OSHA 29 CFR 1910.215)

18.6.2.5.1.6. Reducing Bushing. If a bushing is used in the wheel hole, ensure it does not exceed the width of the wheel and does not contact the flange. (OSHA 29 CFR 1910.215)

18.6.2.5.1.7. Flanges. Mount all abrasive wheels between flanges that are not less than one-third the diameter of the wheel. Exceptions include: mounted wheels, threaded wheels (plug and core), plate mounted wheels, and cylinder, cup, or segmental wheels mounted in chucks. Refer to OSHA 29 CFR 1910.215 for detailed information on exceptions.

18.6.2.5.1.7.1. Flanges shall be dimensionally accurate and in good balance. There shall be no rough surfaces or sharp edges. (OSHA 29 CFR 1910.215)

18.6.2.5.1.7.2. Both flanges shall be the same diameter and have equal bearing surface (**Figure 18.1.**). Exceptions to this are type 27 and type 28 wheels. (Additional information on these exceptions may be found in OSHA 29 CFR 1910.215.

18.6.2.5.1.7.3. The driving flange shall be securely fastened to the spindle and the bearing surface shall run true. When more than one wheel is mounted between a single set of flanges, wheels may be cemented together or separated by specially designed spacers. Spacers shall be equal in diameter to the mounting flanges and have equal bearing surfaces. Blotters will not be used as spacers; normally soft copper or brass will be used. If wheels are to be cemented together, the wheel manufacturer's recommendation will be followed. (OSHA 29 CFR 1910.215)

18.6.2.5.1.7.4. All flanges shall be maintained in good condition. When the bearing surfaces become worn, warped, sprung, or damaged they will be trued and resurfaced. When resurfacing or trueing, material will not be removed from the flange to the point that it loses its rigidity. (OSHA 29 CFR 1910.215)

18.6.2.5.1.8. Blotters. Use blotters between flanges and abrasive wheel surfaces to ensure uniform distribution of flange pressure (**Figure 18.1.**). Exceptions include: mounted wheels, threaded wheels (plug and core), plate mounted wheels, and cylinder, cup, or segmental wheels mounted in chucks. (Refer to OSHA 29 CFR 1910.215 for detailed information on exceptions.) When blotters are required, ensure they cover the entire contact area of wheel flanges. The proper thickness of blotters depends upon the type of material used. OSHA addresses only blotting paper (.025 thickness), but rubber, leather, and felt are all acceptable. Follow the manufacturer's recommendation. (OSHA 29 CFR 1910.215)

18.6.2.5.1.9. Multiple Wheel Mounting. When more than one wheel is mounted between a single set of flanges, cement wheels together or separate them by specially designed spacers. Spacers shall be equal in diameter to the mounting flanges and have equal bearing surfaces. When mounting wheels that have not been cemented together, or ones that do not utilize separating spacers, care must be exercised to use wheels specially manufactured for that purpose. (OSHA 29 CFR 1910.215)

18.6.2.5.1.10. Start Up Procedures. Do not operate machines until the safety guards are in place. After the guards are reinstalled, rotate the wheel several revolutions by hand to ensure it clears both the work rest and the safety guards. Defective wheels are most likely to break when first started; therefore, run newly installed wheels at full operating speed for at least 1 minute before work is applied. During this time, ensure the operator and other personnel stand clear of the machine.

18.6.2.5.2. Wheel Dressing. Damaged or out-of-balance abrasive wheels will produce poor work and may injure the operator. To restore a rutted, excessively rough, or unbalanced wheel, it is necessary to dress it by removing part of the face. Wheel dressing tools will be equipped with hood guards over the tops of cutters to protect the operator from flying wheel particles or pieces of broken cutters. The dresser will be supported on the work rest and the work rest will be adjusted away from the wheel so the heel of the dresser may hook over the work rest and be guided by it as the dresser is moved evenly back and forth across the wheel face. Dressing will be done only by personnel trained in this task. Operators performing dressing operations will:

18.6.2.5.2.1. Wear a face shield over safety glasses for face protection and a respirator if conditions warrant.

18.6.2.5.2.2. Use a dressing tool with a cutting head equal in width to the width of the grinding wheel. Recommend selecting a dresser containing self-traversing star wheels in the cutting head requiring the operator to simply place the dresser against the wheel and apply pressure. The work rest is not required as a guide in order to properly dress the wheel utilizing this dressing tool.

18.6.2.5.2.3. Inspect star dressers for loose shaft and worn discs prior to use.

18.6.2.5.2.4. Round off wheel edges with a hand stone before and after dressing to prevent the edges from chipping.

18.6.2.5.2.5. Use a work rest to support and guide the tool. Use a tool holder if one is available.

18.6.2.5.2.6. Apply moderate pressure slowly and evenly.

18.6.2.5.2.7. Always apply diamond dressers at the center or slightly below the center of the wheel.

18.6.2.5.3. Lubrication. Grinding machine spindle bearings shall be properly lubricated to prevent overheating or other conditions that might damage the abrasive wheel. Lubrication intervals will be established based on the manufacturer's recommendations or more stringent criteria may be adopted if usage experience requires. Improperly lubricated spindle bearings will cause the mounting spindle to expand because of heat generated, thus exerting a stress in the arbor hole area. Other adverse conditions related to improper lubrication can cause vibration that may result in a broken wheel.

18.6.2.6. Guarding. Guards shall be used on grinding machines except wheels used for internal work where the work offers protection. Types 16, 17, 18, 18R, and 19 cones, plugs, and threaded hole pot balls are examples of those not requiring guards while used for internal work (**Figure 18.2.**). On other wheels the guard shall cover the spindle end, nut, and flange projections, and it shall be mounted to maintain proper alignment with the wheel. Fasteners used to mount the guard shall equal or exceed the strength of the guard. An exception to this is where the work itself provides adequate protection. The maximum exposure angles specified in the following paragraphs shall not be exceeded. Visors or other accessory equipment shall not be included as a part of the guard when measuring the guard opening, unless such equipment offers the same protection as the guard and unless the accessory equipment is fastened as securely as the guard. (OSHA 29 CFR 1910.215)

18.6.2.6.1. Bench and Floor Stand (Pedestal) Grinders. The angular exposure of the grinding wheel periphery and sides for safety guards used on these machines shall not exceed 90 degrees or one-fourth of the periphery. This exposure shall begin at a point not more than 65 degrees above the horizontal plane of the wheel spindle. Wherever the nature of the work requires contact with the wheel below the horizontal plane of the spindle, the exposure shall not exceed 125 degrees (OSHA 29 CFR 1910.215) (**Figure 18.3.** and **18.4.**). Where the operator stands in front of the opening, these units shall be equipped with a peripheral protector (tongue guard) that can be adjusted to the decreasing diameter of the wheel. The opening will be maintained at no more than one-fourth of an inch. (OSHA 29 CFR 1910.215)

18.6.2.6.2. Cylindrical Grinders. The maximum angular exposure of the grinding wheel periphery and sides for safety guards used on cylindrical grinding machines shall not exceed 180 degrees. This exposure shall begin at a point not more than 65 degrees above the horizontal plane of the wheel spindle (**Figure 18.5.**). Tongue guard protective requirements of paragraph **18.5.2.6.** also apply to cylindrical grinders. (OSHA 29 CFR 1910.215)

18.6.2.6.3. Top Grinding Operations. Where the work is applied to the wheel above the horizontal centerline, the exposure of the grinding wheel periphery shall be as small as possible and shall not exceed 60 degrees (**Figure 18.6.**). (OSHA 29 CFR 1910.215)

18.6.2.6.4. Additional Types of Grinders. The equipment itemized in the following paragraphs has minimal use at most Air Force installations and guarding criteria will not be addressed. Organizations using this equipment shall develop criteria using the OSHA references listed.

18.6.2.6.4.1. Cup wheels--OSHA 29 CFR 1910.215.

18.6.2.6.4.2. Surface grinders and cutting-off machines--OSHA 29 CFR 1910.215.

18.6.2.6.4.3. Swing frame grinders--OSHA 29 CFR 1910.215.

18.6.2.6.4.4. Automatic snagging machines--OSHA 29 CFR 1910.215.

18.6.2.6.4.5. Band-type guards--OSHA 29 CFR 1910.215.

18.6.2.6.5. Guard Material and Design. If guards are locally manufactured they will meet the requirements of OSHA 29 CFR 1910.215.

18.6.2.6.6. Shields. Shatter-resistant transparent shields shall be provided as an added margin of safety on grinding machines.

18.6.2.6.7. Power Transmission. When power transmission apparatus is separate from the grinding machine, refer to paragraph **18.5.2.21.** for guarding requirements.

18.6.2.7. Wet Grinding. Machines will meet the same criteria for guarding, work rests, and machine set up as for other abrasive wheel machinery. The following also apply:

18.6.2.7.1. When shutting down a wet grinding operation, the coolant will be shut off first and the wheel allowed to rotate until the coolant has been spun out.

18.6.2.7.2. Wet process grinding wheels will not be left partially submerged in water because this may cause an unbalanced wheel that may break when rotated.

18.6.2.7.3. The concentration and alkalinity of coolant affects organic bonded wheels. To avoid damage to these wheels, it is important to follow the manufacturer's directions.

18.6.2.7.4. Floor surfaces around wet processes will be of rough concrete or will have nonskid materials or mats applied to reduce slipping hazards.

18.6.2.8. Wheel Storage. Abrasive wheels are easily broken; therefore, care shall be exercised in handling and storage to prevent damage.

18.6.2.8.1. Wheels will be stored in a dry area that is not subject to extreme temperature changes, or below freezing temperatures. Wet wheels may crack or break if stored below 32 degrees Fahrenheit. Breakage may also occur if a wheel or disk is taken from a cold storage room and work is applied to it before it is warmed to room temperature.

18.6.2.8.2. Storage will be arranged to allow wheel selection and removal without damaging other wheels.

18.6.2.8.3. Thin organic bonded cutting wheels will be laid on a flat horizontal surface away from heat.

18.6.2.8.4. Straight or tapered wheels are best stored when supported on edge in racks.

18.6.2.8.5. Wheels will be dated when placed in storage so they can be issued oldest first. Manufacturer's instructions will be checked to see if wheels or discs have a shelf life requirement and to see if they have special handling or storage requirements that could affect their safe use.

18.6.2.8.6. Wheels that cannot be hand carried will be moved by hand trucks or powered trucks. Wheels will not be rolled on the floor. When moving wheels by truck, workers will avoid bumps and irregular surfaces.

18.6.2.8.7. Wheel storage areas should be as close to the grinding operation as practical.

18.6.2.8.8. Wheels that are bumped, dropped, or show evidence of abuse will be inspected using procedures in paragraph **18.6.2.5.1.3.** prior to being placed in storage. Those found unsatisfactory will be tagged and discarded unless repairs can be performed.

18.6.2.9. Polishing and Buffing Wheels:

18.6.2.9.1. The softness of these wheels is controlled by the size of the flange. The larger the flange, the harder the surface. Special wheel dressing tools may also be used to soften the surface.

18.6.2.9.2. When polishing and buffing wheels are driven by variable speed motors, speed controls should be safeguarded from accidental change.

18.6.2.9.3. When rouge or tripoli is applied to a rotating wheel, the side of the cake will be held lightly against the wheel's periphery. If a stick is used, the side of the stick will be applied so that it will fly away from the wheel.

18.6.2.9.4. Tool rests are not required for wire buffers and polishers.

18.6.2.10. Special Grinding Operations. The use of materials such as magnesium, titanium, thorium, and beryllium present fire and health hazards. Supervisors of these operations will contact the installation ground safety, fire department, and BE personnel for assistance in determining safe work practices and protective equipment needs.

Table 18.1. OSHA Standards.

Subject	OSHA Standard
The Control of Hazardous Energy (Lockout/Tagout)	29 CFR 1910.147
Machinery & Machine Guarding	29 CFR 1910 Subpart O
Machinery & Machine Guarding (definitions)	29 CFR 1910.211
General Requirements for all Machines	29 CFR 1910.212
Woodworking Machinery Requirements	29 CFR 1910.213
Abrasive Wheel Machinery	29 CFR 1910.215
Mechanical Power Presses	29 CFR 1910.217
Mechanical Power Transmission Apparatus	29 CFR 1910.219

Figure 18.1. Flange Installation.

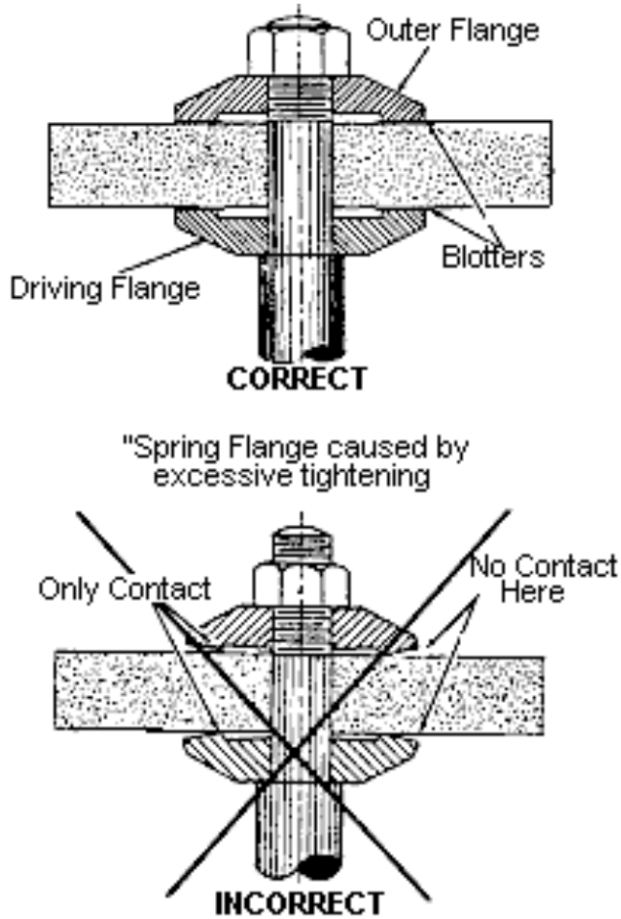

Figure 18.2. Types 16, 17, 18, 18R, and 19 Cone and Plug Wheels.

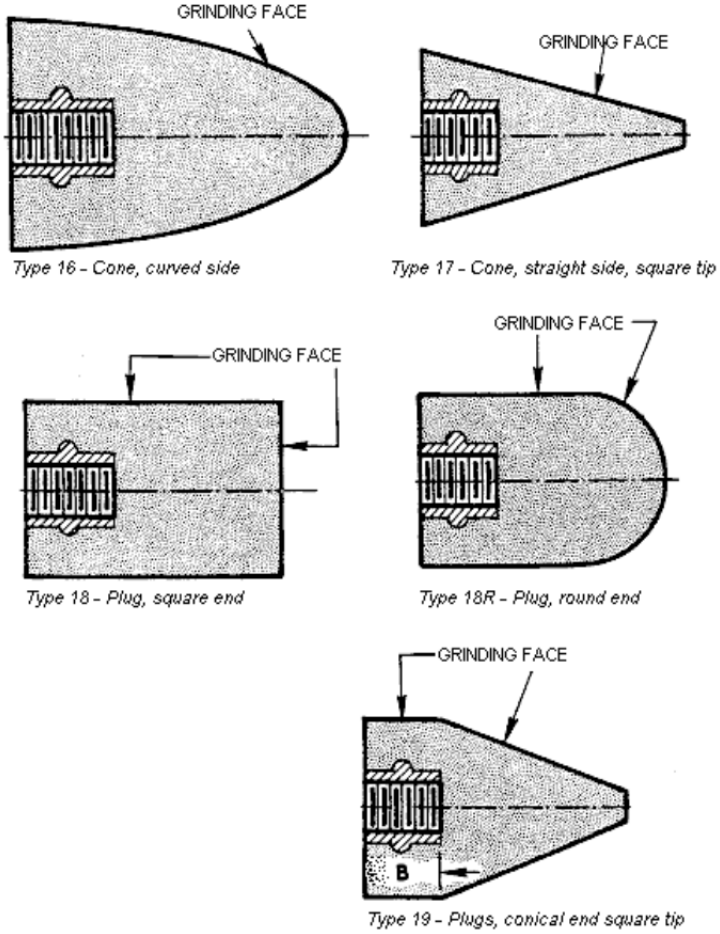

Figure 18.3. Bench and Floor Stand Grinder Guard Exposure Angles.

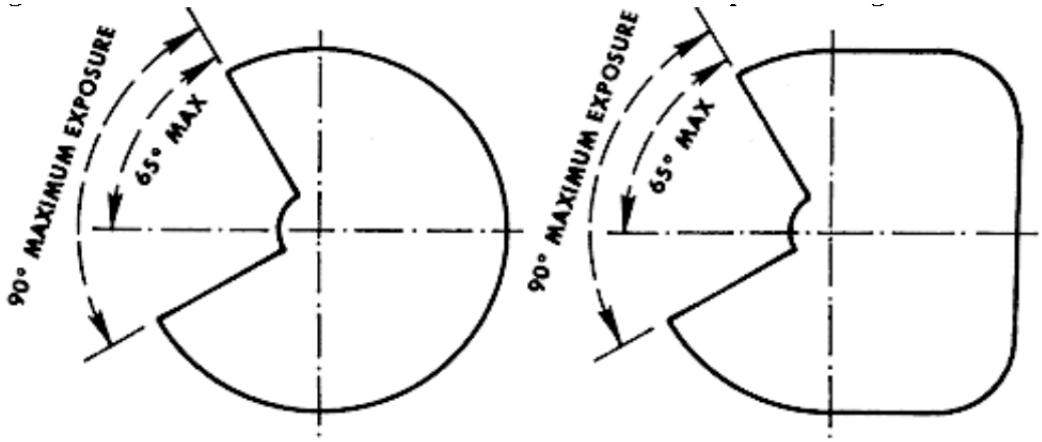

Figure 18.4. Bench and Floor Stand Grinder Guard Exposure Angles When Contact Below the Horizontal Plane of the Spindle is Required.

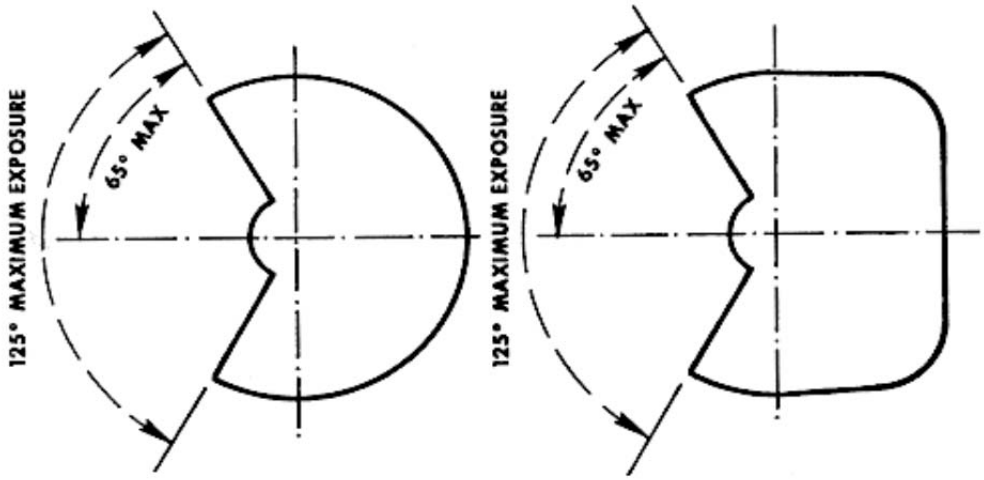

Figure 18.5. Cylindrical Grinder Guard Exposure Angles.

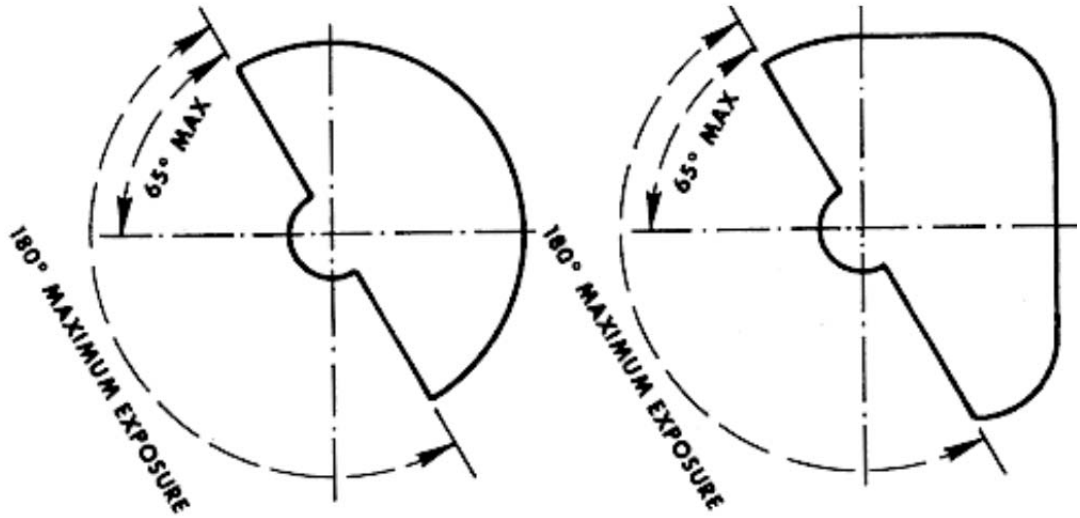

Figure 18.6. Top Grinding Guard Exposure Angles.

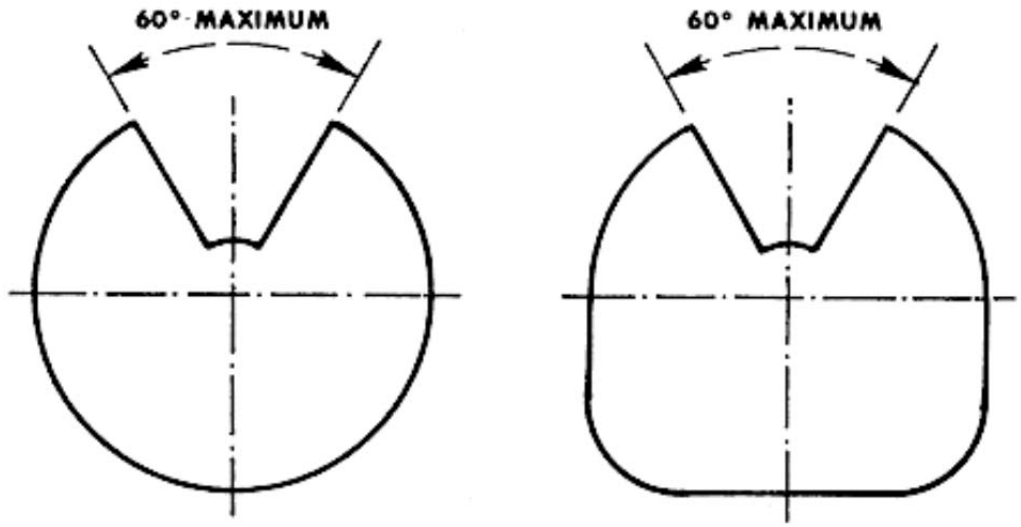

Figure 18.7. Machinery Checklist.

F18.7. This is not an all inclusive checklist. It, like all the checklists in this standard, simply highlights some critical items in the corresponding chapters. Other requirements exist that are not included in the checklist. Where appropriate, MAJCOMs, FOAs DRUs, local safety staffs, and supervisors will add to this checklist to include command or individual location or shop-unique requirements or situations.

F18.1. Tilting-Arbor and Tilting-Table Saws: (Reference **18.4.2.1.**)

F18.2. Is the table saw equipped with a hood that covers the blade-and automatically adjusts itself to the thickness of the material upon which it rides? (Reference **18.4.2.1.1.**)

F18.3. Does the hood cover the part of the saw blade exposed above the material? (Reference **18.4.2.1.1.**)

F18.4. Is the hood adaptable to cover tilted blades? (Reference **18.4.2.1.1.**)

F18.5. Is a spreader provided at the table saw to prevent the wood's internal stresses from clamping down on the saw blade? (Reference **18.4.2.1.2.**)

F18.5. Are table throat openings kept as small as possible to prevent material from dropping below the level of the table? (Reference **18.4.2.1.3.**)

F18.6. Are several size throat pieces available to accommodate rabbeting, grooving, and dadoing operations? (Reference **18.4.2.1.3.**)

F18.7. Are antikickback dogs and fingers or safety hold-down wheels installed when material is being ripped? (Reference **18.4.2.1.4.**)

F18.8. Are antikickback dogs and fingers inspected before each use? (Reference **18.4.2.1.4.**)

F18.7.9. Are antikickback dogs and fingers kept sharp to maintain their holding power? (Reference **18.4.2.1.4.**)

F18.10. Is a helper positioned at the output end of the saw whenever it appears it might be necessary to reach over a revolving saw blade? (Reference **18.4.2.1.5.**)

F18.11. Are saw blades allowed to come to a stop on their own rather than by thrusting a piece of wood against the cutting edge or side of the blade? (Reference **18.4.2.1.6.**)

F18.12. Do saw tables extend far enough on either side of a machine to give full support to a length of board that may be cut? (Reference **18.4.2.1.7.**)

F18.13. Is the blade or cutting head inspected for proper cutting condition (e.g., teeth sharp and properly set, no cracks, free of foreign residue) before a job is started? (Reference **18.4.2.1.8.**)

F18.14. Is the correct blade matched to the work being done? (Reference **18.4.2.1.9.**)

F18.15. Are the following precautions taken:

F18.15.1. A crosscut blade is never used for rip sawing? (Reference **18.4.2.1.9.1.**)

F18.15.2. A ripping blade is never used for crosscutting? (Reference **18.4.2.1.9.1.**)

F18.15.3. Do Services hobby shop supervisors label each saw with a sign or decal that states which type blade is installed and what it is to be used for? (Reference **18.4.2.1.9.1.**)

F18.15.4. Are special blades used for materials in which there may be nails or other metal (example: plywood or lumber)? (Reference **18.4.2.1.9.2.**)

F18.15.5. Is a carbide-tipped, controlled-cut blade used when warped, twisted-grain, knotty, or frozen lumber is ripped? (Reference **18.4.2.1.9.2.**)

F18.16. Do operators take care that they do not crowd (force material faster than it can be cut) the saw? (Reference **18.4.2.1.10.**)

F18.17. If the saw does not cut a clean, straight line, is the saw or running speed checked and condition remedied? (Reference **18.4.2.1.10.**)

F18.18. Do operators only adjust the rip fence after the saw has been turned off and the blade rotation has stopped? (Reference **18.4.2.1.11.**)

F18.19. Is a permanent line marked on the table in front of and in line with the saw blade to enable the operator to set the rip fence without lifting the saw guard? (Reference **18.4.2.1.11.**)

F18.20. Are hands kept out of the line of cut when feeding saws? (Reference **18.4.2.1.12.**)

F18.21. Is material moved forward with a push stick when there is not enough room for hand movement between the rip fence and saw blades? (Reference **18.4.2.1.12.**)

F18.22. Is the hood left in place when narrow material is ripped? (Reference **18.4.2.1.13.**)

F18.23. Are saw blades only set high enough to cut through the material being worked? (Reference **18.4.2.1.14.**)

F18.24. Is one of the following practices used to ensure the above?

F18.24.1. No more than three teeth protrude above the material being cut, or (Reference **18.4.2.1.14.**)

F18.24.2. No more than one-eighth of an inch of saw blade protrudes above the material being cut. (Reference **18.4.2.1.14.**)

F18.25. Are feather boards used as side guides and top holddowns on operations (rabbeting, grooving, and dadoing) when a blade hood cannot be used? (Reference **18.4.2.1.15.**)

F18.26. Radial Arm Saws: (Reference **18.4.2.2.**)

F18.26.1. Are radial saws equipped with a hood that encloses a saw blade and the arbor ends? (Reference **18.4.2.2.1.**)

F18.26.2. Is the lower section of the hood hinged so it rises and falls, adjusting itself automatically to the thickness of the material as the saw passes through it? (Reference **18.4.2.2.1.**)

F18.26.3. Are antikickback devices or hold-down wheels installed on saws used for ripping? (Reference **18.4.2.2.2.**)

F18.26.4. Does the device adapt to any thickness of stock to be cut? ((Reference **18.4.2.2.2.**)

F18.26.5. Are manually-operated radial saws installed so the front end of the table is slightly higher than the rear so the cutting head does not move forward when the motor is turned on? (Reference **18.4.2.2.3.**)

F18.26.6. Prior to starting the saw does the operator pull the saw cutting head all the way forward and, with the operator's hand on the pull grip and exerting little or no force, follow the head back to the original noncutting position? (Reference **18.4.2.2.4.**)

F18.26.7. Is the unit turned off and the rollers checked for wear if the saw has a tendency to drag, is jerky, or requires excessive force? (Reference **18.4.2.2.4.**)

F18.26.8. Does the operator turn the saw on and check to see that the cutting head does not move forward? (Reference **18.4.2.2.5.**)

F18.26.9. Is the unit taken out of service and the malfunction corrected any time sluggish or hesitant movement of the saw is detected? (Reference **18.4.2.2.6.**)

F18.26.10. Do operators take the unit out of service if at any time the saw rolls or moves as a result of vibration? (Reference **18.4.2.2.7.**)

F18.26.11. Does the saw have a positive limit-stop to prevent the saw from traveling beyond the front edge of the table? (Reference **18.4.2.2.8.**)

F18.26.12. Is material measured by placing the material to be cut against a stop gauge (whenever repeat cuts are necessary)? (Reference **18.4.2.2.10.**)

F18.26.13. If it is necessary to measure with a ruler, is the material kept well away from the saw until measuring is completed? (Reference **18.4.2.2.10.**)

F18.26.14. Is the saw head rotated 90 degrees right or left and clamped in position when ripping with a radial saw is necessary? (Reference **18.4.2.2.11.**)

F18.26.15. Is the material fed against the revolving blade from the side where the blade rotates upward toward the operator? (Reference **18.4.2.2.11.**)

F18.26.16. Do the teeth of the saw extend slightly through the material being cut? (Reference **18.4.2.2.11.**)

F18.26.17. Is the direction of the saw rotation conspicuously marked on the hood? (Reference **18.4.2.2.11.**)

F18.26.18. Is a permanent decal or sign not less than 1 inch by three-fourths of an inch, reading **"CAUTION: NEVER RIP FROM THIS END"** (or the nearest commercially available equivalent) affixed to the rear of the guard at approximately the level of the arbor? (Reference **18.4.2.2.11.**)

F18.26.19. Is the saw allowed to return to its stopped position before the stock is removed from the table? (Reference **18.4.2.2.12.**)

F18.26.20. Is the locking device on the saw head securely fastened when angle or miter cuts are being made? (Reference **18.4.2.2.13.**)

F18.26.21. Does the stock lie solidly on the table when cross-cutting? (Reference **18.4.2.2.14.**)

F18.26.22. Does the operator ensure that the blade being used is the proper one for the work being performed? (Reference **18.4.2.2.15.**)

F18.26.23. When removing short pieces from a table close to a saw blade, does the operator ease the saw back to the idling position and make sure that all bouncing has stopped before placing hands on the table? (Reference **18.4.2.2.16.**)

F18.26.24. Is cylindrical stock securely clamped before being cut on a radial saw? (Reference **18.4.2.2.16.**)

F18.27. Band Saws: (Reference **18.4.2.3.**)

F18.27.1. Are both upper and lower wheels completely enclosed on both sides of band saws? (Reference **18.4.2.3.1.**)

F18.27.2. Are these enclosures capable of being easily removed to permit saw blade maintenance? (Reference **18.4.2.3.1.**)

F18.27.3. Is the working part of a saw blade (between the guide rolls and upper wheel enclosure) guarded to prevent accidental contact with the saw blade? (Reference **18.4.2.3.2.**)

F18.27.4. Is the guard self-adjusting and attached to the gauge so that (in any position of the gauge) the guard will completely cover the portion of the saw blade between the guide rolls and the upper wheel enclosure? (Reference **18.4.2.3.2.**)

F18.27.5. Is the saw equipped with an automatic tension control? (Reference **18.4.2.3.3.**)

F18.27.6. Does the feed roll on a self-fed handsaw have a guard to prevent the operator's hands from coming into contact with the in-running rolls at any point? (Reference **18.4.2.3.4.**)

F18.27.7. Is the saw always operated within the safe limit recommended by the manufacturer? (Reference **18.4.2.3.5.**)

F18.27.8. If material binds or pinches on the blade, is the machine turned off and blade motion allowed to stop before the operator attempts to back the work away from the blade? (Reference **18.4.2.3.6.**)

F18.27.9. If a saw blade breaks, does the operator shut off the power, lock the start switch in the off position and not attempt to remove any part of the saw blade until the machine has completely stopped? (Reference **18.4.2.3.7.**)

F18.28. Jointers: (Reference **18.4.2.4.**)

F18.28.1. Is each hand-fed planer and jointer (with a horizontal or vertical head) equipped with a cylindrical cutting head? (Reference **18.4.2.4.1.**)

F18.28.2. Does the knife on these machines project only one-eighth of an inch beyond the cylindrical body of the head? (Reference **18.4.2.4.1.**)

F18.28.3. Is the opening in the table kept as small as possible? (Reference **18.4.2.4.2.**)

F18.28.4. Is the clearance between the edge of the rear table and the cutting head circle or knives no more than one-eighth of an inch? (Reference **18.4.2.4.2.**)

F18.28.5. Is the table throat opening no more than 2 inches when tables are set or aligned with each other for a zero cut? (Reference **18.4.2.4.2.**)

F18.28.6. Are jointers with front-table-mounted fences equipped with an adjustable device to prevent thin stock from slipping laterally under the portion of the fence at the rear of the table? (Reference **18.4.2.4.3.**)

F18.28.7. Is an automatic guard provided to cover the section of the cutter head near the operator (on the working side of the fence) and to contact the wood to prevent any opening from remaining between the guard and wood during the operation? (Reference **18.4.2.4.4.**)

F18.28.8. Does the guard cover the section of the cutter head on the nonworking side of the fence? (Reference **18.4.2.4.4.**)

F18.28.9. Does the guard over the section of the cutting head on the rear side of the fence consist of a sliding metal shield that automatically adjusts to the exposed length of the cutter head? (Reference **18.4.2.4.4.**)

F18.28.10. When power feeders are used, does a metal shield or hood guard the feeding mechanism? (Reference **18.4.2.4.6.**)

F18.28.11. Do operators use holddown push blocks, jigs, or fixtures? (Reference **18.4.2.4.7.**)

F18.29. Power Feed Planers: (Reference **18.4.2.5.**)

F18.29.1. Are guards provided for feed rolls, cutting heads and holddown rolls at the discharge end of power feed planers? (Reference **18.4.2.5.1.**)

F18.29.2. Are feed rolls guarded by a metal strip in front of the rolls under which material may pass, but will prevent an operator's fingers from being drawn into the machine? (Reference **18.4.2.5.1.**)

F18.29.3. If the top roll is corrugated, does the strip extend over the top of the roll? (Reference **18.4.2.5.1.**)

F18.29.4. Are cutting heads and discharge rolls guarded by a solid metal enclosure of substantial construction? (**18.5.2.5.1.**)

F18.29.5. When other than corrugated top feeders are used, is an anti-kickback device installed? (Reference **18.4.2.5.2.**)

F18.29.6. Does the operator examine each planer before using it to ensure that knives are not set to take too heavy a cut for one pass? (Reference **18.4.2.5.3.**)

F18.29.7. Do helpers position themselves where they will not be pinned between the material and an immovable object? (Reference **18.4.2.5.4.**)

F18.29.8. Do operators take precautions to keep their fingers from being pinched between the table top and the material if the material is tipped quickly up and down by the infeed rolls? (Reference **18.4.2.5.5.**)

F18.30. Shapers: (Reference **18.4.2.6.**)

F18.30.1. Are shapers equipped with a braking device that will bring the cutting head to a stop within 10 seconds after power is shut off? (Reference **18.4.2.6.1.**)

F18.30.2. Is a double-spindle machine equipped with separate braking devices? (Reference **18.4.2.6.1.**)

F18.30.3. Does the fence have as small an opening for knives as possible? (Reference **18.4.2.6.2.**)

F18.30.4. Does the fence extend at least 18 inches on either side of the spindle? (Reference **18.4.2.6.2.**)

F18.30.5. Does a guard enclose cutting heads? Is this guard less than the greatest diameter of the cutter? (Reference **18.4.2.6.3.**)

F18.30.6. Are holddowns and jigs used to limit exposure of hands to cutters, whenever possible? (Reference **18.4.2.6.4.**)

F18.30.7. When a blade is removed from a spindle, are all other blades removed at the same time? (Reference **18.4.2.6.5.**)

F18.31. Lathes: (Reference **18.4.2.7.**)

F18.31.1. Is a hinged metal shield or hood (that completely covers the knives and material when the machine is in operation) provided on rotating, cutter-type lathes? (Reference **18.4.2.7.1.**)

F18.31.2. Is a brake (that will bring the rotating material to a quick, but not instantaneous stop after the power is shut off) installed on automatic lathes? (Reference **18.4.2.7.2.**)

F18.31.3. Are automatic lathes placed with the back side against a wall or barrier that will contain knives if they are thrown rearwards? (Reference **18.4.2.7.3.**)

F18.31.4. Are tool rests set parallel and as close as possible to the work and high enough so the tools butt into the wood slightly above the horizontal center of the piece being turned? (Reference **18.4.2.7.4.**)

F18.31.5. Is a control stop provided on faceplate-type lathes? (Reference **18.4.2.7.5.**)

F18.31.6. Are guards that will contain the workpiece if it separates from its anchorage installed on lathes used for turning long pieces of material? (Reference **18.4.2.7.6.**)

F18.31.7. Do operators stand to the side when working with hand-turning tools? (Reference **18.4.2.7.7.**)

F18.31.8. Is sandpaper held in the fingers and pressed lightly against a small area at the top of the rotating material? (Reference **18.4.2.7.8.**)

F18.31.9. Is only good quality wood used for wood turning? (Reference **18.4.2.7.9.**)

F18.32. Sanding Machines: (Reference **18.4.2.8.**)

F18.32.1. Is a guard installed on the feed rolls of self-feed sanding machines? (Reference **18.4.2.8.1.**)

F18.32.2. Are guards installed at each nip point on a belt sanding machine? Is the unused run of the sanding belt guarded? (Reference **18.4.2.8.2.**)

F18.33. Boring and Mortising Machines: (Reference **18.4.2.9.**)

F18.33.1. Are set screws on safety-bit chucks non-projecting? (Reference **18.4.2.9.1.**)

F18.33.2. Is a guard, enclosing all portions of the bit and chuck above the material being worked, installed on boring bits? (Reference **18.4.2.9.2.**)

F18.33.3. Is the top of the driving mechanism enclosed? (Reference **18.4.2.9.3.**)

F18.33.4. If there is a counterweight, is one of the following (or equivalent) methods used to prevent its dropping? (Reference **18.4.2.9.4.**)

F18.33.4.1. Bolted to the bar by a bolt passing through both the bar and counterweight; (Reference **18.4.2.9.4.1.**)

F18.33.4.2. A bolt put through the extreme end of the bar; (Reference **18.4.2.9.4.2.**)

F18.33.4.3. A safety chain attached if the counterweight does not encircle the bar. (Reference 18.3.2.9.4.3.)

F18.33.4.4. Are other types of counterweights suspended by chain or wire rope and travel in a pipe or other suitable enclosure whenever they might fall and cause injury or damage? (Reference **18.4.2.9.4.4.**)

F18.33.5. Are universal joints on spindles of boring machines completely enclosed? (Reference **18.4.2.9.4.5.**)

F18.33.6. Are holddown devices installed on table-type boring or mortising machines? (Reference **18.4.2.9.4.6.**)

F18.34. Tenoning Machines: (Reference **18.4.2.10.**)

F18.34.1. Are feed chains and sprockets of double end tenoning machines completely enclosed (except for the portion of cabin used for conveying the stock)? (Reference **18.4.2.10.1.**)

F18.34.2. Are sprockets and chains guarded at the sides by plates projecting beyond the periphery of sprockets and the ends of lugs at the rear ends of frames over which feed conveyors run? (Reference **18.4.2.10.2.**)

F18.34.3. Are cutting heads and saws (if used) on tenoning machines covered by metal guards? Do these guards cover at least the unused part of the periphery of the cutting head? (Reference **18.4.2.10.3.**)

F18.34.4. If an exhaust system is used, does the guard form part or all of the exhaust hood? (Reference **18.4.2.10.3.**)

F18.35. Electrical Requirements and Safeguards: (**18.4.2.11.**)

F18.35.1. Is the motor **START** switch protected against accidental or inadvertent operation? (Reference **18.4.2.11.1.**)

F18.35.2. Is machinery installed according to the National Electrical Code (NEC)? (Reference **18.4.2.11.2.**)

F18.35.3. Are control switches available to workers at their operating positions so they do not need to reach over moving parts of machinery? (Reference **18.4.2.11.3.**)

F18.35.. Is the stop control switch identified by a printed word or color coded red? (Reference **18.4.2.11.3.**)

F18.35.5. Do operators know that controls are not to be wedged for continuous operation? (Reference **18.4.2.11.3.**)

F18.35.6. Are undervoltage protective devices installed on machines that are not adequately safeguarded to protect the worker during undervoltage situations? (Reference **18.4.2.11.4.**)

F18.35.7. Have installation safety offices and shop supervisors identified those machines that require undervoltage protection? (Reference **18.4.2.11.4.**)

F18.35.8. Are foot treadle controls protected against unexpected or accidental tripping? Do these controls have a nonslip surface? (Reference **18.4.2.11.5.**)

F18.35.9. Are exposed noncurrent-carrying metal components (that may become energized) grounded? (Reference **18.4.2.11.6.**)

F18.35.10. Are all machine energy sources or energy isolating devices, such as disconnect switches or circuit breakers, locked out or tagged out before maintenance is performed or major adjustments are made with guards and panels removed? Is a machine or equipment with a simple wall plug as the power source unplugged? (Reference **18.4.2.11.7.**)

F18.35.11. Is an AF Form 982, *Do Not Start* tag, used temporarily until lockout is accomplished or in conjunction with the lockout? (Also **Chapter 21**) (Reference **18.4.2.11.7.**)

F18.36. Safeguarding by Location or Distance: (Reference **18.4.2.12.**)

F18.36.1. Is the machine or its dangerous moving parts positioned so hazardous areas are not accessible or do not present a hazard to a worker during the normal operation of the machine? (Reference **18.4.2.12.**)

F18.36.2. Before attempting the use of any safeguarding techniques, is a thorough hazard analysis made of each machine and particular situation? (Reference **18.4.2.12.1.**)

F18.36.3. Does the supervisor and installation safety office perform this analysis and publish the results? (Reference **18.4.2.12.1.**)

F18.36.4. Does the analysis clearly identify that workers are protected from dangerous moving parts and is one of the following restrictions used? (Reference **18.4.2.12.1.**)

F18.36.4.1. Unguarded moving parts of machines are a minimum distance of 8 feet above the work level (floor, platform, or passageway). (Reference **18.4.2.12.2.**)

F18.36.4.2. Machines are in an enclosed area with a locked entrance and the enclosure (wall or fence) is at least 8 feet high. Is the main source of power disconnected and locked in the **OFF** position when maintenance, service, or machine adjustments are made? (Reference **18.4.2.13.**)

F18.37. Safeguarding Devices: (Reference **18.4.2.13.**)

F18.37.1. If a safeguarding device is used to replace a guard, does it perform one or more of the following functions: (Reference **18.4.2.13.1.**)

F18.37.1.1. Stop the machine if a body part is inadvertently placed in the danger area? (Reference **18.4.2.13.1.1.**)

F18.37.1.2. Restrain or withdraw the operator's hands from the danger area during operation? (Reference **18.4.2.13.1.2.**)

F18.37.1.3. Require the operator to use both hands on machine controls? (Reference **18.4.2.13.1.3.**)

F18.37.1.4. Provide a barrier that is synchronized with the operating cycle of the machine? (Reference **18.4.2.13.1.4.**)

F18.37.2. Are safeguarding devices installed, adjusted, and used according to manufacturer's operating and maintenance instructions? (Reference **18.4.2.13.2.**)

F18.38. Safeguarding by Barrier or Enclosure: (Reference **18.4.2.14.**)

F18.38.1. Are hazardous parts, which are not protected by the device, guarded according to **18.4.2.14.**?

F18.38.2. Does the guard, by design, construction, application, and adjustment: (Reference **18.4.2.14.1.**)

F18.38.2.1. Prevent hands, fingers, or other body parts from entering into the hazardous areas by reaching through, over, under, or around the guard? (Reference **18.4.2.14.1.1.**)

F18.38.2.2. Not create a pinch point between the guard and moving machine parts? **18.4.2.14.1.2.**)

F18.38.2.3. Be not easily removed by the worker? (**18.4.2.14.1.3.**)

F18.38.2.4. Offer maximum visibility of the point of operation consistent with operational or maintenance requirement? (Reference **18.4.2.14.1.4.**)

F18.38.3. Is the guard securely affixed to the machine? (Reference **18.4.2.14.1.5.**)

F18.38.4. When a point-of-operation guard cannot be used because of unusual shapes or cuts, are jigs or fixtures used? (Reference **18.4.2.14.2.**)

F18.38.5. Whenever a guard is removed for other than an operational requirement, is the machine shut down and the control switch(s) locked and tagged in the **OFF** position? (Reference **18.4.2.14.3.**)

F18.38.6. Are enclosure and barrier guards interlocked with the machine control (whenever possible) so the machine cannot be activated unless the guard itself or the hinged or movable sections of the guard are in position? (Reference **18.4.2.14.4.**)

F18.38.7. Does the guard prevent the operator from opening the interlocked section and reaching into the point of operation? (Reference **18.4.2.14.4.1.**)

F18.38.8. Do guards, which are interlocked with the machine cycle, stop the related component, interrupt the machine cycle, or shut down the machine? (Reference **18.4.2.14.4.3.**)

F18.38.9. When the periphery of the blades of a fan are less than 7 feet above the floor or working level, are the blades guarded? (Reference **18.4.2.14.5.**)

F18.38.10. Does the fan guard have openings no larger than one-half of an inch in width and depth? (Reference **18.4.2.14.5.**)

F18.38.11. Is the mesh able to withstand being pushed into the fan blade during normal use? (Reference **18.4.2.14.5.**)

F18.38.12. Is the guard designed and installed so no part of the body can be inadvertently placed in, on, under, or over the edges of the guard where it might contact a moving part? (Reference **18.4.2.14.6.1.**)

F18.38.13. Are guards made of expanded metal; perforated or solid sheet metal; or wire mesh, plastic, or other material of equal or greater strength? (Reference **18.4.2.14.6.2.**)

F18.38.14. Are guards fastened to the framework of the machinery? (Reference **18.4.2.14.6.2.**)

F18.38.15. Does the installation civil engineer, installation ground safety office, or the installation BEE determine the best material for guard construction (if required) in environments where chemical or corrosive operations are performed? (Reference **18.4.2.14.6.2.**)

F18.38.16. Is the enclosure guard and its supports designed and installed so an adult person leaning on, or falling against, the enclosure will not receive an injury from the moving part?

(Reference **18.4.2.14.6.3.**)

F18.38.17. Is the enclosure capable of containing the broken parts (if there is a reasonable possibility of the moving part failing and causing injury)? (Reference **18.4.2.14.6.3.**)

F18.38.18. When part failure is considered a hazard, is the guard filler material a solid metallic sheet, plate stock, or casting? (Reference **18.4.2.14.6.4.**)

F18.38.19. If sheet or molded plastics or other metallics are used, have they been impact-tested to resist penetration of a specific failing part? (Reference **18.4.2.14.6.4.**)

F18.38.20. Do openings to permit lubrication, adjustment, or inspection have hinged, sliding, or bolted cover plates and are they closed prior to starting the machine? (Reference **18.4.2.14.6.5.**)

F18.38.21. Are horizontal belts and ropes above floors or platforms guarded for their entire length if located over passageways or workplaces, if center-to-center distance between pulleys is 10 feet or more, or if the belt is 8 inches or more in width? (Reference **18.4.2.14.6.6.**)

F18.38.22. Are vertical belts running over a lower pulley above the floor or platform guarded at the bottom in the same manner as overhead belts? (Reference **18.4.2.14.6.7.**)

F18.38.23. Where loose pulleys or idlers are not practical, are belt perches (brackets, rollers, etc.) used to keep idler belts away from the shafts? Are these perches of strong materials and designed for the safe shifting of belts? (Reference **18.4.2.14.6.8.**)

F18.38.24. When the belt or rope is in motion, is belt dressing applied (only when necessary) where belts leave the pulleys, not where they approach them? (Reference **18.4.2.14.6.9.**)

F18.38.25. Is a guard provided to prevent the belt from leaving the pulley on the side where insufficient clearance exists, unless the distance to the nearest fixed pulley, clutch, or hanger exceeds the width of the belt used? (Reference **18.4.2.14.6.10.**)

F18.38.26. Where there are overhanging pulleys on a line, jack, or countershaft, with no bearing between the pulley and the outer end of the shaft, is a guard installed to prevent the belt from running off the pulley? (Reference **18.4.2.14.6.10.**)

F18.38.27. Are pulleys with cracks or pieces broken out of the rims taken out of service? (Reference **18.4.2.14.6.11.**)

F18.38.28. Are pulleys that are used in areas where they would be exposed to corrosion made of corrosion-resistant material? (Reference **18.4.2.14.6.12.**)

F18.38.29. Are pulleys located in corrosive environments inspected semiannually to ensure they are in satisfactory condition? (Reference **18.4.2.14.6.12.**)

F18.38.30. Do operators and maintenance personnel pay close attention to the integrity of guards? (Reference **18.4.2.14.6.13.**)

F18.38.31. If exhaust hoods serve as guards for table saws or wheels of bandsaws do they meet the construction criteria for guards? (Reference **18.4.2.14.6.14.**)

F18.39. Related Equipment: (Reference **18.4.2.15.**)

F18.39.1. Are holding tools used when it would otherwise be necessary to place hands in the danger zone? (Reference **18.4.2.15.2.**)

F18.39.2. Are these tools used only to supplement guard protection and not used as a substitute for guarding? (Reference **18.4.2.15.2.**)

F18.40.1. Power Presses: (Reference **18.5.2.1.**)

F18.40.2. Does the supervisor ensure that either a fixed barrier guard, safeguard device, or combination of both is installed and used on every operation when the opening between the die (tool) and base (anvil) is more than one-fourth of an inch? (Reference **18.5.2.1.1.**)

F18.40.3. Do the functional manager and installation safety officials approve guarding by location? (Reference **18.5.2.1.1.**)

F18.40.4. Do personnel know that the use of hand-feeding tools, regardless of size, does not replace a guard or device? (Reference **18.5.2.1.1.**)

F18.40.5. Are guards designed and constructed so a worker cannot reach through, over, under, or around the guard? (Reference **18.5.2.1.2.**)

F18.40.6. If fixed guarding is not possible because of the nature of an operation, is a properly installed and functioning device used to protect against point-of-operation hazards? (Reference **18.5.2.1.3.**)

F18.40.7. If a type A gate is used, does it enclose the point of operation before a stroke can be initiated and remain closed as long as the slide is moving? (Reference **18.5.2.1.3.1.1.**)

F18.40.8. If a type B gate is used, does it prevent access prior to the start of the motion or die closure? (Reference **18.5.2.1.3.1.2.**)

F18.40.9. Does the supervisor take special efforts to ensure pull-out devices are used correctly and are properly aligned? (Reference **18.5.2.1.3.2.**)

F18.40.10. Are holdout or restraint devices securely anchored and adjusted to prevent the operator from reaching into the point of operation at any time? (Reference **18.5.2.1.3.3.**)

F18.40.11. Are presence-sensing devices used only on part-revolution clutch presses? (Reference **18.5.2.1.3.4.**)

F18.40.12. Are areas that are not protected by the presence-sensing devices guarded? (Reference **18.5.2.1.3.4.**)

F18.40.13. Are sweep-type devices used in conjunction with type safeguarding for point-of-operation guarding? (Reference **18.5.2.1.3.5.**)

F18.40.14. Do the buttons on two-hand control devices operate only when the buttons are depressed concurrently? Do the buttons also operate only when depressed continuously (holding time) on the downstroke or else is the clutch disengaged, the brake applied, and the slide stopped? (Reference **18.5.2.1.4.**)

F18.40.15. Are two-hand trips and presence-sensing devices located far enough away from the point of operation that when operators release the control buttons or disturb the presence-sensing field, they do not have time to reach into the point of operation before the die closes or slide stops? (Reference **18.5.2.1.4.2.**)

F18.40.16. When devices such as two-hand controls, presence-sensing devices, type B gate, or movable barriers are used on part-revolution clutch presses, is a control reliability system and brake monitor system used? (Reference **18.5.2.1.4.4.**)

F18.40.17. Are energy controls isolated by a lockout device and safety blocks during machine repairs or alterations of the die area? (Reference **18.5.2.1.4.6.**)

F18.40.18. Are single or dual hand-lever-operated power presses equipped with a spring latch on the operating lever to prevent premature or accidental tripping? (Reference **18.5.2.1.4.7.**)

F18.40.19. Are the operating levers on hand-tripped machinery with more than one operating station interlocked? (Reference **18.5.2.1.4.8.**)

F18.40.20. Is a means provided to select OFF, INCH, SINGLE STROKE, or CONTINUOUS modes of operation? Is it integrated with the clutch brake control to govern the operation mode of the presses? (Reference **18.5.2.1.4.9.**)

F18.40.21. During the inch operating mode, is exposure to the worker's hands to the point of operation protected by one of the following: (Reference **18.5.2.1.4.10.**)

F18.40.22. Concurrent use of both hands to actuate the clutch? (Reference **18.5.2.1.4.10.1.**)

F18.40.23. Use of a single control protected against accidental actuation? Is the control located so the worker cannot reach into the point of operation while actuating the control? (Reference **18.5.2.1.4.10.2.**)

F18.40.24. Do two-handed controls for single-stroke press machines ensure safe operation (by design, construction, and (or) separation) so that: (Reference **18.5.2.1.4.11.**)

F18.40.25. The concurrent use of both hands is required to trip the press? (Reference **18.5.2.1.4.11.1.**)

F18.40.26. Machine adjustments can be made, but the concurrent use of both hands is required during the die closing portion of the stroke? (Reference **18.5.2.1.4.11.2.**)

F18.40.27. Repetitive operation is not possible unless the controls are activated in proper sequence? Does the control system require that all operators' hand controls are released before an interrupted stroke can be resumed? (Reference **18.5.2.1.4.11.3.**)

F18.40.28. Are individual operator's two-hand trip controls designed and constructed so that the use of both hands is required to protect against unintentional operations? Is a control arrangement used that requires concurrent operation of both the individual operator's hand controls? Is bypass of control interlocks prohibited? (Reference **18.5.2.1.4.12.**)

F18.40.29. Do two-hand trip systems on full-revolution-clutch machines provide anti-repeat protection for operators? (Reference **18.5.2.1.4.13.**)

F18.40.30. When two-hand trip systems are used on multiple operator machines, does each operator have a separate set of controls? (Reference **18.5.2.1.4.13.**)

F18.40.31. Are operators provided picks, pliers, tongs, and other hand-feeding tools required for the safe handling of stock, dies, or materials? (Reference **18.5.2.1.4.14.**)

F18.40.32. Are these tools used in addition to the required protective clothing, equipment, or machine guarding? (Reference **18.5.2.1.4.14.**)

F18.40.33. Is a die setter's safety bar used for turning the flywheel when the power is off? (Reference **18.5.2.1.4.14.**)

F18.40.34. Are individual die guards attached to the die shoe, stripper, or die block in a fixed position as alternates or supplements to other guarding methods? Are they designed so the operator cannot reach over, under, or around the guard into the danger zone? (Reference **18.5.2.1.4.15.**)

F18.40.35. Are attachment points provided on dies requiring mechanical handling? (Reference **18.5.2.1.4.15.1.**)

F18.40.36. Are die stops or other means used to prevent inadvertent movement of the die on inclined presses? (Reference **18.5.2.1.4.15.2.**)

F18.41. Hydraulic Press: (Reference **18.5.2.2.**)

F18.41.1. Are hydraulic power presses safeguarded to prevent the operator's hands entering the area between the dies during press cycling? (Reference **18.5.2.2.**)

F18.41.2. Do controls meet the requirements of paragraphs **18.5.2.15.** – **18.5.2.16.**? (Reference **18.5.2.2.1.**)

F18.41.3. When two hand control systems are installed, do they incorporate an anti-repeat feature? (Reference **18.5.2.2.1.1.**)

F18.41.4. Is the Stop and Auto Return switch (when provided) color-coded yellow? Is a power disconnect or Stop switch (capable of being locked) provided? (Reference **18.5.2.2.1.2.**)

F18.41.5. Are energy sources controlled as referenced in paragraph **18.4.2.11.**? (Reference **18.5.2.2.2.**)

F18.41.6. Do pneumatic and hydraulic systems meet the requirements of paragraph **18.5.2.19.**? (Reference 18.5.2.2.2.3.)

F18.42. Press Brakes: (Reference **18.5.2.3.**)

F18.42.1. Do press brake controls meet the requirements of paragraphs **18.5.2.15.** – **18.5.2.16.**? (Reference **18.5.2.3.1.**)

F18.42.2. Are energy sources controlled as referenced in paragraph **18.4.2.11.**? (Reference **18.5.2.3.2.**)

F18.42.3. Do pneumatic and hydraulic systems meet the requirements of paragraph **18.5.2.19.**? (Reference **18.4.2.9.**)

F18.42.4. Is the type of safeguard used geared to the operation being performed? (Reference **18.5.2.3.4.**)

F18.42.5. Does the supervisor ensure that safeguards are available and used? (Reference **18.5.2.3.4.**)

F18.42.6. Are the following requirements used, based upon the type of safeguard available and installed for the operation:

F18.42.6.1. Paragraph **18.4.2.13.** - Safeguarding by Distance or Location?

F18.42.6.2. Paragraph **18.4.2.13.** - Safeguarding Device?

F18.42.6.3. Paragraph **18.5.2.20.** - Related Tools?

F18.42.6.4. Paragraph **18.5.2.21.** - Power Transmission Belts and Pulleys?

F18.42.6.5. Paragraph **18.5.2.22.** - Power Clamping, Work Holding Equipment?

F18.43. Shapers, Forming Rolls, Calenders, and Cold Headers: (Reference **18.5.2.4.**)

F18.43.1. Do controls meet the requirements of paragraphs **18.5.2.15.** – **18.5.2.16.**? (Reference **18.5.2.4.1.**)

F18.43.2. Are energy sources controlled as referenced in paragraph **18.4.2.11.**? (Reference **18.5.2.4.2.**)

F18.43.3. Are all pneumatic and hydraulic components designed and maintained to meet paragraph **18.5.2.19.** requirements? (Reference **18.5.2.4.3.**)

F18.43.4. Is the primary function of the safeguards to protect the operator's hands, fingers, and other body parts from contacting the point of operation and slide mechanisms? (Reference **18.5.2.4.4.**)

F18.43.5. Are adjustable barrier or enclosure safeguards used to the maximum extent possible? (Reference **18.5.2.4.4.**)

F18.43.6. Are the requirements of paragraphs **18.4.2.13.** – **18.4.2.14.** used in evaluating the safeguard? (Reference **18.5.2.4.4.**)

F18.43.7. Are additional barrier guards provided at the refuse drop areas? (Reference **18.5.2.4.4.1.**)

F18.43.8. Is the rear of the reciprocating ram guarded to protect other employees? (Reference **18.5.2.4.4.1.**)

F18.43.9. Is a chip guard provided to prevent flying chips from striking the operator or other workers? (Reference **18.5.2.4.4.2.**)

F18.43.10. Are all materials securely clamped in position on the machine table? (Reference **18.5.2.4.4.2.**)

F18.44. Shears: (paragraph **18.5.2.5.**)

F18.44.1. Is safeguarding provided to protect the operators from the hazardous areas? (Reference **18.5.2.5.**)

F18.44.2. Do controls meet the requirements of paragraphs **18.4.2.15.** – **18.4.2.5.1.**? (Reference **18.5.2.5.1.**)

F18.44.3. Are energy sources controlled as referenced in paragraph **18.4.2.11.**? (Reference **18.5.2.5.2.**)

F18.44.4. Do pneumatic and hydraulic systems meet the standards of paragraph **18.5.2.11.**? (Reference **18.5.2.5.3.**)

F18.44.5. Is barrier or enclosure guarding considered the primary means of safeguarding shearing machines? (Reference **18.5.2.5.4.**)

F18.44.6. Are paragraphs **18.4.2.13.** – **18.4.2.14.**, and **18.5.2.20.** – **18.5.2.22.** used to evaluate the adequacy of installed guards or devices? (Reference **18.5.2.5.4.**)

F18.44.7. Is the area where sheared or punched refuse drops barricaded to prevent injuries to operators and helpers? (Reference **18.5.2.5.4.**)

F18.44.8. Are machines equipped with an emergency stop control? (Reference **18.5.2.5.4.**)

F18.45. Lathes, Screw/Bar, and Chucking Machines: (Reference **18.5.2.6.**.)

F18.45.1. Do controls meet the requirements of paragraphs **18.5.2.15.** – **18.5.2.16.**? (Reference **18.5.2.6.1.**)

F18.45.2. Do pneumatic and hydraulic systems (when installed) meet the standards in paragraph **18.5.2.19.**? (Reference **18.5.2.6.3.**)

F18.45.3. Is a fixed or movable barrier device or awareness device installed when a lathe operates in the automatic or semi-automatic mode? (Reference **18.5.2.6.4.**)

F18.45.4. Is a barrier guard, rigid awareness barrier (protective railing), or awareness device installed during machine operation on power-indexed turrets that contain an exceptionally long tool or tool-holding device that extends in the operator's workspace? (Reference **18.5.2.6.5.**)

F18.45.5. Is one of the above safeguards installed when a rotating workpiece extends beyond the normal confines of the machine? (Reference **18.5.2.6.5.**)

F18.45.6. Is a spindle braking device installed on lathes procured after the date of this standard (if the operator must stop the spindle to manually unload a work piece)? (Reference **18.5.2.6.6.**)

F18.45.7. Are chucks always started on the lathe spindle by hand? (Reference **18.5.2.6.7.**)

F18.45.8. Is the tail stock end of the work countersunk deeply enough so there is minimal chance of the work being torn loose? (Reference **18.5.2.6.8.**)

F18.45.9. Are tools adjusted in the tool rest so they are slightly above the center? (Reference **18.5.2.6.9.**)

F18.45.10. When chips are being generated, is a tool, puller, brush, or shovel used to remove them? (Reference **18.5.2.6.10.**)

F18.45.11. Do operators know they are not to brake the lathe by grasping the chuck, work, or any other machine component? (Reference **18.5.2.6.11.**)

F18.46. Drilling, Milling, and Boring Machines: (Reference **18.5.2.7.**)

F18.46.1. Is a barrier guard or guarding device installed and used when: (Reference **18.5.2.7.**)

F18.46.1.1. Machines are operated in an automatic or semi-automatic mode? (Reference **18.5.2.7.**)

F18.46.1.2. Cutting devices are exposed? (Reference **18.5.2.7.**)

F18.46.1.3. Any part of the operator's body is within 1 foot of the cutting device? (Reference **18.5.2.7.**)

F18.46.2. Are awareness barriers used only in situations when a guard or guarding devices would (of itself) present a hazard? (Reference **18.5.2.7.**)

F18.46.3. Does the type of guarding depend on the machine, location, and operation? (Reference **18.5.2.7.**)

F18.46.4. Do the requirements identified in paragraph **18.5.2.20.** apply to the design and installation of shields?

F18.46.5. Are operators cautioned not to hand-hold stock? (Reference **18.5.2.7.1.**)

F18.46.6. Is a hold-down fixture or stock vise used to prevent injuries? (Reference **18.5.2.7.1.**)

F18.46.7. Are only drill chucks without protruding set screws used? (Reference **18.5.2.7.2.**)

F18.46.8. Are auxiliary devices and extra tools stored properly? (Reference **18.5.2.7.3.**)

F18.46.9. Are drill presses operated only at speeds specified by the press or drill manufacturer for the particular material to be drilled? (Reference **18.5.2.7.4.**)

F18.46.10. Are automatic and high production drilling machines equipped with barricades or enclosures to separate operators and other personnel from drilling operations? (Reference **18.5.2.7.5.**)

F18.46.11. Are steps or stairs (when necessary for making adjustments to the machine or work) well constructed, provided with nonslip treads, and in good repair? (Reference **18.5.2.7.5.**)

F18.46.12. Do operator/mechanical controls meet the requirements of paragraphs **18.5.2.15.** – **18.5.2.16.**? (Reference **18.5.2.7.6.**)

F18.46.13. Are energy sources controlled as referenced in paragraph **18.4.2.11.1.** - **18.4.2.11.7.**? (Reference **18.5.2.7.7.**)

F18.46.14. Do pneumatic and hydraulic systems (when provided) conform to paragraph **18.5.2.19.1.**-**18.5.2.19.7.**? (Reference **18.5.2.19.**)

F18.47. Planers: (paragraph **18.5.2.8.**)

F18.47.1. Is the reciprocating work and table barricaded, or enclosed, to prevent personnel from being struck by material? (Reference **18.5.2.8.**)

F18.47.2. Is a chip shield provided to prevent chips from flying and striking personnel? (Reference **18.5.2.8.1.**)

F18.47.3. Are safety dogs placed at each end of the planer table? (Reference **18.5.2.8.2.**)

F18.47.4. Is material securely clamped in position on the planer table? (Reference **18.5.2.8.3.**)

F18.48. Saws: (**18.5.2.9.**)

F18.48.1. Do saws meet the general requirements in paragraphs **18.5.2.15.** – **18.5.2.18.4.**?

F18.48.2. Do the supervisor and installation ground safety personnel develop requirements on machine safe-guards for saws not covered in this standard? (Reference **18.5.2.9.**)

F18.49. Bandsaws: (Reference**18.5.2.10.**)

F18.49.1. Are both upper and lower wheels completely enclosed on both sides? Can the enclosures be easily removed for maintenance? (Reference **18.5.2.10.1.**)

F18.49.2. Is the working part of a saw blade guarded to prevent accidental contact with the saw blade? Is the guard self-adjusting and attached to the gauge so that the guard will completely cover the portion of the saw blade between the guide rolls and the upper wheel enclosure? (Reference **18.5.2.10.2.**)

F18.49.3. Are saws equipped with an automatic tension control to ensure proper tension of the saw blade? (Reference **18.5.2.10.3.**)

F18.49.4. Are feed rolls on self-fed bandsaws guarded? (Reference **18.5.2.10.4.**)

F18.49.5. Is the saw speed kept within the limits recommended by the manufacturer? (Reference **18.5.2.10.5.**)

F18.50. Hacksaws: (Reference **18.5.2.11.**)

F18.50.1. Is loss of coolant and lubricants minimized by proper maintenance of the coolant system and the installation of splash shields? (Reference **18.5.2.11.1.**)

F18.50.2. Are vises, fixtures, and other work-holding equipment used to hold the workpiece securely? (Reference **18.5.2.11.2.**)

F18.50.3. Does the operator know not to hand-hold stock that is being cut by a power hacksaw? (Reference **18.5.2.11.3.**)

F18.51. Circular Metal Saws: (Reference **18.5.2.12.**)

F18.51.1. Does the safeguard have enough strength to protect the operator from a broken saw blade or teeth? (Reference **18.5.2.12.1.**)

F18.51.2. Does the safeguard enclose the spindle end and nut? (Reference **18.5.2.12.2.**)

F18.51.3. Is the safeguard provided with an opening or means of removing chips that, in itself, will not create a hazard to the operator? (Reference **18.5.2.12.3.**)

F18.51.4. Does the safeguard enclose all unused portions of the exposed saw blade? Does a barrier protect the part of the blade used for cutting? Is the barrier positioned to protect the operator from exposure to the blade? (Reference **18.5.2.12.4.**)

F18.51.5. Is the loss of coolant and lubricants minimized by proper maintenance of the coolant system and the installation of splash shields? (Reference **18.5.2.12.5.**)

F18.51.6. Are vises, fixtures, and other work-holding equipment used to hold the workpiece securely? (Reference **18.5.2.12.6.**)

F18.51.7. Are all circular sawing machines equipped with a pair of flanges? (Reference **18.5.2.12.7.**)

F18.52. Cut-Off and Contour Saws: (Reference **18.5.2.13.**)

F18.52.1. Are both the upper and lower wheels on both sides of saws enclosed? Is the enclosure hinged to permit easy access to the saw blade? (Reference **18.5.2.13.1.**)

F18.52.2. Is the working part of the saw blade guarded to prevent accidental contact with the saw blade? Is the guard self-adjusting and is it attached to the gauge so the guard will completely cover the portion of the saw blade between the guide rolls and the upper wheel enclosure? (Reference **18.5.2.13.2.**)

F18.52.3. Are abrasive cut-off saws connected to an exhaust system? (Reference **18.5.2.13.3.**)

F18.52.4. Do operators know not to hand-hold stock being cut by a power hacksaw? (Reference **18.5.2.13.4.**)

F18.52.5. Riveting Machines (**18.5.2.14.**). Is a guard provided to prevent the operators from placing their hands between dies? (Reference **18.5.2.14.**)

F18.53. Operator Controls: (Reference **18.5.2.15.**)

F18.53.1. Are controls within easy reach of the machine operator? Are they placed so the worker does not have to reach past moving parts? (Reference **18.5.2.15.1.**)

F18.53.2. Are controls positioned or protected against accidental or inadvertent operation? (Reference **18.5.2.15.2.**)

F18.53.3. Do operators know not to wedge controls for continuous operation? (Reference **18.5.2.15.3.**)

F18.53.4. Are controls clearly identified when their function is not self-evident? Do they not initiate motion unrelated to its designation? (Reference **18.5.2.15.4.**)

F18.53.5. If jog circuits are used, are they designed to prevent continuous run or automatic operation? (Reference **18.5.2.15.5.**)

F18.53.6. Are foot (treadle) controls protected against unexpected and accidental tripping? Do these controls have a nonslip surface? (Reference **18.5.2.15.6.**)

F18.53.7. Are energy sources controlled as referenced in **18.4.2.11.**?

F18.54. Mechanical Controls: (Reference **18.5.2.16.**)

F18.54.1. Do handwheels that turn in a clockwise rotation produce a linear movement to the right, away, or upward? If a rotary motion is produced by the handwheel, does clockwise rotation cause clockwise movement of the controlled component? (Reference **18.5.2.16.1.**)

F18.54.2. Do control levers move in the same direction as the controlled component when both motions are parallel? (Reference **18.5.2.16.2.**)

F18.54.3. Is an adjustable barrier guard installed when crank and handwheel controls with protrusions rotate at more than 50 surface feet per minute? (Reference **18.5.2.16.3.**)

F18.55. Multiple Control Stations: (Reference **18.5.2.17.**)

F18.55.1. When a setup control station is provided, does selection of the setup station render the operator's station inoperative, except for emergency stop? (Reference **18.5.2.17.1.**)

F18.55.2. Does switching from one control station not create a hazard? (Reference **18.5.2.17.1.**)

F18.55.3. When more than one operator is required to operate the machine from different control stations, is each station provided with a cycle start button (which must be depressed concurrently in order to initiate the cycle)? (Reference **18.5.2.17.2.**)

F18.55.4. Are all cycle start buttons other than the one being used made inoperative (when one operator can operate the machine from more than one station)? (Reference **18.5.2.17.3.**)

F18.55.5. Where parts are manually loaded and the operator may be exposed to a hazard due to cutter or machine table movements, is the rapid traverse from one part or position to the other initiated by the operator? (Reference **18.5.2.17.4.**)

F18.56. Emergency Stop Control: (Reference **18.5.2.18.**)

F18.56.1. Do all machines incorporate one or more emergency stop controls that, upon momentary operation, de-energize all machine motions? (Reference **18.5.2.18.1.**)

F18.56.2. Are these emergency stops located at each operator control station? If inherent hazards are present at other operating position, is an emergency stop provided? (Reference **18.5.2.18.1.**)

F18.56.3. Is the emergency stop color coded red? (Reference **18.5.2.18.2.**)

F18.56.4. Does the emergency stop control override all other controls? When actuated, does it not create other hazards? (Reference **18.5.2.18.3.**)

F18.56.5. Can machine motions that are stopped by the emergency or master switch only be restarted by deliberate action by the operator? (Reference **18.5.2.18.4.**)

F18.57. Pneumatic and Hydraulic Systems: (Reference **18.5.2.19.**)

F18.57.1. Are circuits designed and components selected, applied, and adjusted so loss of control media will not cause a hazard? (Reference **18.5.2.19.1.**)

F18.57.2. Are circuits designed and components applied so pressure variations do not cause a hazard? (Reference **18.5.2.19.2.**)

F18.57.3. Are components used that cannot be adjusted outside the safe working range of the circuit? (Reference **18.5.2.19.3.**)

F18.57.4. Are means provided to prevent operation when loss of working pressure can cause a hazard? (Reference **18.5.2.19.4.**)

F18.57.5. Do circuits employing accumulator tanks automatically vent the accumulator pressure or isolate the accumulator when the machine is shut off? (Reference **18.5.2.19.5.**)

F18.57.6. Are nonvented accumulators identified with a sign saying "WARNING - PRESSURIZED VESSEL" or the nearest commercially available equivalent? (Reference **18.5.2.19.6.**)

F18.57.7. Is charging and discharging information for proper servicing given on or near the accumulator (in a visible location) and in the maintenance manual? (Reference **18.5.2.19.6.**)

F18.57.8. Are gas-charged accumulators operating above 200 psig charging pressure charged with inert gas? (Reference **18.5.2.19.7.**)

F18.57.9. Are flexible hoses arranged so they do not create a tripping hazard? (Reference **18.5.2.19.8.**)

F18.57.10. If failed flexible hoses may constitute a whipping hazard, are they restrained or contained? (Reference **18.5.2.19.8.**)

F18.57.11. Whenever pressure is maintained after power is off, is a warning plate used? (Reference **18.5.2.19.9.**)

F18.57.12. Are procedures for depressurizing the circuit **NOTED:** in the maintenance manual? (Reference **18.5.2.19.9.**)

F18.58. Related Equipment: (Reference **18.5.2.20.**)

F18.58.1. Are shields used to provide protection from flying particles? (Reference **18.5.2.20.1.**)

F18.58.2. Is a splash shield installed when chips or coolant fluids are splashed on the operator or on the work area and passageway floor? (Reference **18.5.2.20.1.**)

F18.58.3. Are holding tools used when it would otherwise be necessary to place hands in the danger zone? Are these tools used in addition to guards? (Reference **18.5.2.20.2.**)

F18.59. Power Transmission Belts and Pulleys: (Reference **18.5.2.21.**)

F18.59.1. Are horizontal belts and ropes above floors or platforms guarded for their entire length if:

F18.59.2. Located over passageways or workplaces; (Reference **18.5.2.21.1.**)

F18.59.3. Center-to-center distance between pulleys is 10 feet or more; or (Reference **18.5.2.21.1.**)

F18.59.4. The belt is 8 inches or more in width? (Reference **18.5.2.21.1.**)

F18.59.5. Are vertical belts running over a lower pulley above the floor or platform guarded at the bottom in the same manner as overhead belts? (Reference **18.5.2.21.2.**)

F18.59.6. Where loose pulleys or idlers are not practical, are belt perches used to keep idler belts away from the shafts? Are the perches made of strong materials and designed for the safe shifting of belts? (Reference **18.5.2.21.3.**)

F18.59.7. Do operators know that belt dressing should not be applied when the belt or rope is in motion? If it is necessary, is dressing applied where belts leave the pulleys, not where they approach them? (Reference **18.5.2.21.4.**)

F18.59.8. Is a guard provided to prevent the belt from leaving the pulley on the side where insufficient clearance exists (with exceptions)? (Reference **18.5.2.21.5.**)

F18.59.9. Where there are overhanging pulleys on a line, jack, or countershaft (with no bearing between the pulley and the outer end of the shaft) is a guard installed to prevent the belt from running off the pulley? (Reference **18.5.2.21.5.**)

F18.59.10. Are pulleys with cracks or pieces broken out of rims taken out of service? (Reference **18.5.2.21.6.**)

F18.59.11. Are pulleys (used in areas where they would be exposed to corrosion) made of corrosion-resistant material? Are they inspected semiannually to ensure they are in satisfactory condition? (Reference **18.5.2.21.7.**)

F18.60. Powered Clamping, Work Holding Devices: (Reference **18.5.2.22.**)

F18.60.1. Are these devices provided with a safeguard to warn the operator or contain the workpiece when there is a lack of clamping pressure? (Reference **18.5.2.22.**)

F18.60.2. If an electrical interlock is installed does it shut off power to the lathe when hydraulic pressure drops or electrical interruption occurs? (Reference **18.5.2.22.**)

F18.60.3. If an audible or visual warning device is used, is it visible or audible to the operator at his normal work position? (Reference **18.5.2.22.**)

F18.61.1. Exhaust Ventilation (Reference **18.6.2.1.**). Are local exhaust ventilation systems provided and used whenever dry grinding, polishing, or buffing is performed to maintain employee exposures within permissible exposure limits?

F18.61.2. Wheel and Spindle Speeds: (**18.6.2.2.**)

F18.61.3. Is the spindle rpm of the grinders shown on the machine and in a location that is readily visible to the operator? (Reference **18.6.2.2.1.**)

F18.61.4. Are grinding wheels that do not have the operating speed affixed to the wheel, tagged and removed from service until the rpm rating is validated? (Reference**18.6.2.2.2.**)

F18.61.5. Safe Operating Procedures: (Reference **18.6.2.3.**)

F18.61.6. Are abrasive wheel machines only operated with safety guards installed? (Reference **18.6.2.3.1.**)

F18.61.7. Are peripheral protectors (tongue guards) positioned so that there is no more than one-fourth of an inch opening between the wheel and the guard? (Reference **18.6.2.3.2.**)

F18.61.8. Are work rests always used during all off-hand grinding operations? (Reference **18.6.2.3.3.**)

F18.61.9. Are work rests rigidly constructed? (Reference **18.6.2.3.3.**)

F18.61.10. Are work rests designed so that they may be adjusted to compensate for wheel wear? (Reference **18.6.2.3.3.1.**)

F18.61.11. Are work rests adjusted closely to the wheel with a maximum opening of one-eighth of an inch to prevent the work from being jammed between the wheel and the rest? (Reference **18.6.2.3.3.1.**)

F18.61.12. Are work rests securely clamped after each adjustment? (Reference **18.6.2.3.3.1.**)

F18.61.13. Are adjustments made only with the wheel out of motion? (Reference **18.6.2.3.3.1.**)

F18.61.14. Are precautions taken to prevent grinding of stock that is thin enough to be pulled between work rests and the wheel? (Reference **18.6.2.3.3.2.**)

F18.61.15. Are the abrasive wheel machines only operated within rated speeds? (Reference **18.6.2.3.4.**)

F18.61.16. Are grinding wheels removed from service when any of the following occurs:

F18.61.17. Cracked, defective, or out-of-balance? (Reference **18.6.2.3.5.**)

F18.61.18. When worn to a size that would allow the flange assembly to contact the piece being ground on the work rest? (Reference **18.6.2.3.5.**)

F18.61.19. Do operators of grinding machines stand to one side when initially turning the machine on, until it has reached its operating speed? (Reference **18.6.2.3.6.**)

F18.61.20. When the machine chatters or vibrates, do operators stop the machine and inspect it to determine the cause? (Reference **18.6.2.3.7.**)

F18.61.21. Are all operators prevented from using the abrasive grinding wheels to grind aluminum, brass, copper, or other soft metals (unless the wheel is specifically designed for that purpose)? (Reference **18.6.2.3.8.**)

F18.61.22. Are operators prevented from using the side of the wheel for grinding (other than wheels designed for that purpose)? (Reference **18.6.2.3.9.**)

F18.61.23. Do all operators ensure that the grinders, buffers and wire brush machines are turned off when work is completed or prior to leaving the vicinity of the machine? (Reference **18.6.2.3.10.**)

F18.61.24. Are operators who wear loose-fitting clothing prevented from using these machines? (Reference **18.6.2.3.11.**)

F18.61.25. During any grinding operation, do the operators wear safety glasses or goggles for protection of the eyes, in conjunction with a face shield for protection from wheel breakage, sparks, and other grinding debris? (Reference **18.6.2.3.12.**)

F18.61.26. Do operators wear shop aprons of heavy construction when grinding operations are performed on a continuing or prolonged basis? (Reference **18.6.2.3.12.**)

F18.61.27. Do operators wear gloves when the work has burrs, rough edges or presents other hazards to their hands? (Reference **18.6.2.3.12.**)

F18.61.28. Do wire brush wheel operators utilize protective shop aprons of heavy construction and a face shield during all operations? (Reference **18.6.2.3.13.**)

F18.61.29. Do polishing and buffer wheel operators wear a face shield during all operations? (Reference **18.6.2.3.14.**)

F18.62. Inspections (Reference **18.6.2.4.**). Do operators inspect the grinding machines prior to each usage for the following:

F18.62.1. Work rests for security and proper adjustment (e.g., one-eighth of an inch maximum)? (Reference **18.6.2.4.1.**)

F18.62.2. Wheels for security and condition (e.g., cracks, gouges, chipped edges, or uneven wear)? (Reference **18.6.2.4.2.**)

F18.62.3.Wheels for evidence of side grinding, or grinding of soft metals on wheels not designed for these purposes? (Reference **18.6.2.4.3.**)

F18.62.4. Shatter-resistant transparent shields for cleanliness, scoring and proper placement? (Reference **18.6.2.4.4.**)

F18.62.5. Machine guards and power transmission guards for condition, security, and proper alignment? (Reference **18.6.2.4.5.**)

F18.62.6. Periphery (tongue) guards for security and proper adjustment (e.g., one-fourth of an inch maximum opening)? (Reference **18.6.2.4.6.**)

F18.62.7. Proper lighting at point of operation? (Reference **18.6.2.4.7.**)

F18.63. Maintenance and Lubrication: (Reference **18.6.2.5.**)

F18.63.1. Prior to performing maintenance on grinding equipment do operators ascertain that the machine power source is turned off and locked out or the power cord is unplugged? (Reference **18.6.2.5.**)

F18.63.2. Do maintenance personnel refer to and follow the manufacturer's recommendation concerning size and design of mounting flanges and mounting techniques prior to any maintenance? (Reference **18.6.2.5.1.**)

F18.63.3. Before the wheel is mounted, is the spindle speed of the machine checked to ensure that it does not exceed the maximum operating speed marked on the wheels? (Reference **18.6.2.5.1.1.**)

F18.63.4. Is the shelf life of the wheels checked to ensure that the requirements have not been exceeded? (Reference **18.6.2.5.1.2.**)

F18.63.5. Have all the wheels received a thorough visual inspection and received a ring test prior to use? (Reference **18.6.2.5.1.3.**)

F18.63.6. Does the grinding wheel fit freely on the spindle and remain free under all grinding conditions? (Reference **18.6.2.5.1.4.**)

F18.63.7. Are all contact surfaces of wheels, blotters, and flanges flat and free of foreign matter? (Reference **18.6.2.5.1.5.**)

F18.63.8. If a bushing is used in the wheel hole, is the width of the bushing less than the width of the wheel so that it does not contact the flange? (Reference **18.6.2.5.1.6.**)

F18.63.9. Are abrasive wheels mounted between flanges that are not less than one-third the diameter of the wheel? (Reference **18.6.2.5.1.7.**)

F18.63.10. Are flanges free of rough surfaces or sharp edges? (Reference **18.6.2.5.1.7.1.**)

F18.63.11. Are flanges dimensionally accurate and in good balance? (Reference **18.6.2.5.1.7.1.**)

F18.63.12. Are both flanges of the same diameter and have equal bearing surface? (Reference 18.6.2.5.1.7.1.)

F18.63.13. Is the driving flange securely fastened to the spindle and does the bearing surface run true? (Reference **18.6.2.5.1.7.3.**)

F18.63.14. Where more than one wheel is mounted between a single set of flanges, are the wheels cemented together or separated by specially designed spacers? (Reference **18.6.2.5.1.7.3.**)

F18.63.15. Are the spacers equal in diameter to the mounting flanges and have equal bearing surfaces? (Reference **18.6.2.5.1.7.3.**)

F18.63.16. Are blotters prohibited from being used as spacers? (Reference **18.6.2.5.1.7.3.**)

F18.63.17. When wheels are to be cemented together, are the wheel manufacturer's recommendations followed? (Reference **18.6.2.5.1.7.3.**)

F18.63.18. When the bearing surfaces become worn, warped, sprung, or damaged are they trued and resurfaced? (Reference **18.6.2.5.1.7.4.**)

F18.63.19. When resurfacing or truing bearing surfaces, is the removal of material prohibited beyond the point that it loses its rigidity? (Reference **18.6.2.5.1.7.4.**)

F18.63.20. Are blotters always used between flanges and abrasive wheel surfaces to ensure uniform distribution of flange pressure? (Reference **18.6.2.5.1.8.**)

F18.63.21. When blotters are required, do they cover the entire contact area of wheel flanges per manufacturer's recommendations? (Reference **18.6.2.5.1.8.**)

F18.63.22. Are the safety guards in place prior to starting the machine? (Reference **18.6.2.5.1.10.**)

F18.63.23. After the guards are reinstalled, is the wheel rotated several revolutions by hand to insure that it clears both the work rest and the safety guards prior to starting? (Reference **18.6.2.5.1.10.**)

F18.63.24. Are newly installed wheels run at full operating speed for at least one minute before work is applied? (Reference **18.6.2.5.1.10.**)

F18.63.25. During the one minute run-in of the wheel are the operator and other personnel standing clear of the machine? (Reference **18.6.2.5.1.10.**)

F18.63.26. When performing wheel dressing operations, are wheel dressing tools properly equipped with hood guards over the tops of cutters? (Reference **18.6.2.5.2.**)

F18.63.27. Is the dresser supported on the work rest and the work rest adjusted away from the wheel so that the heel of the dresser hooks over the work rest? Does the work rest guide the dresser as it moves back and forth across the wheel face? (Reference **18.6.2.5.2.**)

F18.63.28. Is dressing accomplished only by personnel trained in this task? (Reference **18.6.2.5.2.**)

F18.63.29. Do personnel wear face shields over safety glasses for face protection, and a respirator if conditions warrant? (Reference **18.6.2.5.2.1.**)

F18.63.30. Do personnel utilize a dressing tool designed for the task? (Reference **18.6.2.5.2.2.**)

F18.63.31. Do personnel inspect star dressers for loose shaft and worn discs prior to use? (Reference **18.6.2.5.2.3.**)

F18.63.32. Do personnel round off wheel edges with a handstone before and after dressing to prevent the edges from chipping? (Reference **18.6.2.5.2.4.**)

F18.63.33. Do personnel use work rests to support and guide the tool and use a tool holder if one is available? (Reference **18.6.2.5.2.5.**)

F18.63.34. Do personnel apply moderate pressure, slowly and evenly? (Reference **18.6.2.5.2.6.**)

F18.63.35. Do personnel always apply diamond dressers at the center or slightly below the center of the wheel? (**18.6.2.5.2.7.**)

F18.63.36. Do personnel establish and utilize lubrication intervals for the grinding machine spindle bearings based on the manufacturer's recommendations? (Reference **18.6.2.5.3.**)

F18.64. Guarding: (Reference **18.6.2.6.**)

F18.64.1. Are guards used on all grinding machines, except wheels used for internal work where the work offers protection? (Reference **18.6.2.6.**)

F18.64.2. On wheels requiring guards, does the guard cover the spindle end, nut, and the flange projections? (Reference **18.6.2.6.**)

F18.64.3. Is the guard mounted so as to maintain proper alignment with the wheel? (Reference **18.6.2.6.**)

F18.64.4. Do the fasteners used to mount the guard equal or exceed the strength of the guard? (Reference **18.6.2.6.**)

F18.64.5. Does the angular exposure of the grinding wheel periphery and sides for safety guards not exceed 90 degrees or one-fourth of the periphery? Is the angular exposure of the grinding wheel periphery and sides for safety guards used on bench and floor (pedestal) grinders less than the maximum 90 degrees or less than one-fourth of the periphery? (Reference **18.6.2.6.1.**)

F18.64.6. When the operator stands in front of the opening of bench and floor stand (pedestal) grinder, is the unit equipped with a peripheral protector (tongue guard) that can be adjusted to the decreasing diameter of the wheel? Is the opening maintained at one-fourth of an inch or less? (Reference **18.6.2.6.1.**)

F18.64.7. Is the angular exposure of the cylindrical grinding wheel periphery and sides for safety guards maintained at less than 180 degrees? (Reference **18.6.2.6.2.**)

F18.64.8. When the operator stands in front of the opening of the cylindrical grinder, is the unit equipped with a peripheral protector (tongue guard) that can be adjusted to the decreasing diameter of the wheel? Is the opening maintained at one-fourth of an inch or less? (Reference **18.6.2.6.1.**)

F18.64.9. Where the work is applied to the wheel above the horizontal center line, is the exposure of the grinding wheel periphery as small as possible and does not exceed 60 degrees? (Reference **18.6.2.6.3.**)

F18.65. Wet Grinding (Reference **18.6.2.7.**). Do wet grinding machines meet the same criteria for guarding, work rest, and machine set up as required for other abrasive wheel machinery? Do they include the following requirements:

F18.65.1. When shutting down a wet grinding operation, do personnel shut off the coolant first and allow the wheel to rotate until the coolant has been spun out? (Reference **18.6.2.7.1.**)

F18.65.2. Are wet process grinding wheels restricted from being left partially submerged in water, preventing a possible unbalanced wheel that may break when rotated? (Reference **18.6.2.7.2.**)

F18.65.3. Do operators follow the manufacturer's directions to prevent coolant alkalinity from affecting organic bonded wheels? (Reference **18.6.2.7.3.**)

F18.65.4. Are controls established to reduce slipping hazards on floor surfaces around wet processes, i.e., rough concrete or have non-skid materials or mats applied? (Reference **18.6.2.7.4.**)

F18.66. Wheel Storage (Reference **18.6.2.8.**). Are abrasive wheels handled and stored as follows to prevent damage:

F18.66.1. Are wheels stored only in dry areas that are not subject to extreme temperature changes, or below freezing temperatures? (Reference **18.6.2.8.1.**)

F18.66.2. Are wheels taken from a cold storage room permitted to warm up to room temperature before work is applied to it? (Reference **18.6.2.8.1.**)

F18.66.3. Is storage arranged to allow wheel selection and removal without damaging other wheels? (Reference **18.6.2.8.2.**)

F18.66.4. Are thin organic bonded cutting wheels only stored on a flat horizontal surface away from heat? (Reference **18.6.2.8.3.**)

F18.66.5. Are straight or tapered wheels only stored supported on edges in racks? (Reference **18.6.2.8.4.**)

F18.66.6. Are wheels dated when placed in storage so they can be issued oldest first? (Reference **18.6.2.8.5.**)

F18.66.7. Are heavy wheels moved by hand trucks or powered trucks, and not rolled on the floor? (Reference **18.6.2.8.6.**)

F18.66.8. Are wheel storage areas as close to the grinding operations as practical? (Reference **18.6.2.8.7.**)

F18.66.9. Are wheels that are found unsatisfactory, tagged and discarded unless repairs can be performed? (Reference **18.6.2.8.8.**)

F18.67. Polishing and Buffing Wheels: (Reference **18.6.2.9.**)

F18.67.1. When polishing and buffing wheels are driven by variable speed motors, are speed controls safeguarded to prevent accidental change? (Reference **18.6.2.9.2.**)

F18.67.2. When rouge or tripoli is applied to a rotating polishing or buffing wheel, is the side of the cake held lightly against the wheel's periphery? If a stick is used, is the side of the stick applied so it will fly away from the wheel? (Reference **18.6.2.9.3.**)

F18.67.3. Special Grinding Operations (Reference **18.6.2.10.**). Do supervisors of operations that use materials such as magnesium, titanium, thorium, and beryllium contact installation ground safety, fire department, and bioenvironmental engineering personnel for assistance to determine safe work practices and protective equipment needs?

Chapter 19

EMERGENCY SHOWER AND EYEWASH UNITS

19.1. General Information. This chapter addresses selection, acquisition, location, installation, maintenance, testing, and use of emergency shower and eyewash units. Also included are performance specifications for both permanently-installed and self-contained units. Types of equipment covered are emergency showers, eyewash units, eye and face units, combination units, hand-held drench hoses, and eyewash bottles. There is minimal coverage of this subject in OSHA standards and most of the information in this standard is Air Force developed, as derived from ANSI Standard Z358.1, *Emergency Eyewash and Shower Equipment*. Air Force guidance and functional application are contained in the remainder of this chapter beginning with paragraph **19.2.** The Air Force guidance in this standard includes all regulatory OSHA requirements. The figures are provided for information only so the various units will be easily recognizable. There are many different makes, styles, and combinations available. They must be selected carefully so the proper unit for the use intended is obtained.

19.1.1. Hazards and Human Factors. Protection of the eyes and face in the industrial environment is important. The best means of protection is to engineer hazards out of the job so the worker is not exposed. If this is not possible, safety goggles and face shields need to be worn. Eyewash units, eye and face units, deluge showers and other similar devices are emergency equipment and not a substitute or alternative for personal protective equipment. Injuries may be caused by exposure to chemicals, by materials thrown from equipment or machinery, and when substances are propelled with sufficient velocity to be injurious. Other injuries, particularly to the face and eyes, may occur when harmful liquids are sprayed, squirted, splashed, splattered, dropped, or dipped.

19.1.2. OSHA Standard 29 CFR 1910.111, *Storage and Handling of Anhydrous Ammonia*.

19.1.2.1. Paragraph (b)(10)(iii) states: “Stationary storage installations shall have an easily accessible shower or a 50-gallon drum of water.”

19.1.2.2. Paragraph (b)(10)(iv) says: “Each vehicle transporting ammonia in bulk except farm applicator vehicles shall carry a container of at least 5 gallons of water and shall be equipped with a full-face respirator with the appropriate filters.”

19.1.3. OSHA Standard 29 CFR 1910.151, *Medical Services and First Aid*, states: “Where the eyes or body of any person may be exposed to injurious corrosive materials, suitable facilities for quick drenching or flushing of the eyes and body shall be provided within the work area for immediate emergency use.”

19.1.4. OSHA Standard 29 CFR 1910.268, *Telecommunications*, states: “Eye protection devices which provide side as well as frontal eye protection for employees shall be provided when measuring storage battery specific gravity or handling electrolyte, and the employer shall ensure that such devices are used by the employees. The employer shall also ensure that acid resistant gloves and aprons shall be worn for protection against spattering. Facilities for quick drenching or flushing of the eyes and body shall be provided unless the storage batteries are of the enclosed type and equipped with explosion proof vents, in which case sealed water rinse or neutralizing packs may be substituted for the quick drenching or flushing facilities. Employees assigned to work with storage batteries shall be instructed in emergency procedures such as dealing with accidental acid spills.”

19.1.5. OSHA Standard 29 CFR 1926.441, *Batteries and Battery Charging (Subpart K, Electrical)* states: "Facilities for quick drenching of the eyes and body shall be provided within 25 feet (7.62 m) of battery handling areas." This is a limited OSHA requirement applicable only to the construction industry. For consistency, the Air Force will use a uniform 10-second distance criteria for all work situations. Refer to paragraph **19.6.**

19.2. Effective Dates. The criteria in this standard are effective as of the publishing date of the standard. Any installation of emergency shower or eyewash units, construction and (or) renovation projects, and system design projects after the date of this publication will conform to this standard. Those previously installed units that do not meet the criteria of this standard will be evaluated by installation ground safety and bioenvironmental engineering (BE) staffs. In areas where employees are exposed to severe hazards, the units will be brought into compliance with this standard. If employee exposure is minimal, existing units may be used until there is a need to replace or modify them.

19.3. Responsibilities. Each supervisor is responsible for ensuring that emergency showers and eyewashes are provided, inspected, tested, and maintained according to this standard. As a minimum, emergency showers and (or) eyewashes will be provided in those areas specifically designated in paragraph **19.1.** Careful consideration will be exercised in requiring emergency showers and (or) eyewashes in areas other than those identified. Evaluations for each request for emergency showers and (or) eyewashes will be made by the installation ground safety and BE staffs to determine the need for the installation of units. Rationale for decisions made will be documented and maintained in respective facility case files. The type of material used, its properties, how the material is dispensed, probability of injury, extent of potential injury, and personal protective equipment (PPE) available and used are a few of the issues which will be considered prior to determining the need for the units. Emergency showers and eyewashes are NOT a substitute for personal protective equipment and personnel will use proper PPE when required (refer to **Chapter 14**. Also, refer to **Chapter 14** for information regarding the wear of contact lenses).

19.4. Equipment:

19.4.1. Permanently-installed shower and eyewash units (**Figure 19.1.**) provide the best emergency protection for personnel whose eyes or body have been exposed to hazardous materials. Self-contained units (**Figure 19.2.**) and eyewash bottles (**Figure 19.3.**), at best, offer minimum protection and their use will be restricted to the provisions of paragraphs **19.4.3.** through **19.4.5.** and then only with approval of the installation ground safety manager and bioenvironmental engineer (BEE).

19.4.2. Hand-held drench hoses (**Figure 19.4.**) support shower and eyewash units but do not replace them. They can be used in cases where the user is in an awkward position physically or to reach parts of the face or body that are inaccessible to the fixed stream of the shower or eyewash. Eyes are usually washed with a spent stream which is accomplished by holding the hose up and washing the eye at the point where the stream has a minimum pressure.

19.4.3. Self-contained units provide minimum employee protection and will only be used when approved by the installation ground safety manager and the BEE. The following situations warrant considering these units:

19.4.3.1. As an interim fix, pending installation of a permanently-installed unit.

19.4.3.2. If the employee is exposed to irritants rather than substances that could damage the eye.

19.4.3.3. In temporary locations where a permanent installation would not be economically feasible or may not be possible.

19.4.3.4. In field operations, such as remote Intercontinental Ballistic Missile (ICBM) sites, where a source of potable water is not available.

19.4.4. Eyewash bottles are not a replacement for other type units. An eyewash bottle may be kept in the immediate vicinity where employees are working on extremely hazardous operations. These units supply immediate flushing, and with this accomplished, the individual may then proceed or be helped to a permanently-installed or self-contained unit and flush the eyes more thoroughly.

19.4.5. Personnel working in remote areas where eyewash facilities are not readily available could be exposed to dust, fuels, solvents, and other materials that if blown or splashed into the eyes are not normally injurious but will definitely be an irritant. A quick flushing of the eyes is usually very beneficial prior to medical treatment and vehicles supporting such operations should be equipped with eyewash bottles or other means of flushing the eyes.

19.5. Acquisition. Emergency shower and eyewash equipment may be both locally and centrally procured. The procuring document shall include a requirement for the equipment to meet or exceed ANSI Standard Z358.1 (1998) specifications.

19.6. Location. Emergency showers and eyewash units shall be installed and operable where required by paragraph **19.1.** They shall be in conspicuously identified accessible locations that require no more than 10 seconds to reach and shall be free of obstruction that may inhibit the immediate use of the equipment. Some corrosive substances have a very fast reaction time and exposure to them would require that the emergency shower and eyewash unit be located immediately adjacent to the hazard. The installation ground safety manager and BEE should be consulted for assistance in determining when more stringent criteria are warranted. The unit should be located as close to the hazard as possible without physically causing a hazard itself and shall not be located where the water spray could contact any energized electrical circuit when practical. Energized circuits located within two feet of emergency eyewash stations and within five feet of emergency shower stations will be protected with ground fault circuit interrupter (GFCIs). Because the shower unit functions with large volumes of water flowing downward, it is unsuitable for washing contaminants from the eyes. It is therefore advisable that the shower be installed as close to, or in conjunction with, eye and face or eyewash facilities.

19.7. Installation. Permanently-installed units shall be assembled, installed, and tested by qualified civil engineers or contractor personnel following the manufacturer's instructions and the applicable portion of paragraph **19.13.** Facility design requirements will be considered prior to installation. Install eyewash stations to meet the requirements of OSHA, ANSI Standard Z358.1 and the manufacturer of the unit. Travel distances to eyewash stations should not exceed 100 feet or shall not take more than 10 seconds to reach. Workers should not have to open any doors to reach the station. Placement of the unit should be in a central location where the need is the greatest. A situation may require that more than one station be available. Units will be connected to a supply of water that is free from contamination and equal in purity to potable water. Water pressure must be capable of delivering a sufficient volume to produce the required columns and sprays shown in the manufacturer's instructions.

19.7.1. Water shall not be delivered at extreme temperature (hot or cold) that could be expected to discourage the unit's use. Water temperature should be in the range of 60° degrees Fahrenheit (F) to 100°

degrees F. Lukewarm water of about 90° F to 95° F is ideal. In circumstances where chemical reaction is accelerated by contact with water or increased water temperature, the BEE will be consulted for guidance. Self-contained units and the supply lines of permanently-installed units shall be protected from freezing and from sunlight or other heat sources that could cause extremes in water temperature.

19.7.2. Permanently-installed units and self-contained units installed in fixed locations shall be identified with a highly visible sign. The area around or behind the unit, or both, may be painted with green and white stripes if needed to increase visibility. If highlighted, the painted area will be large enough to be easily identified by the user. Emergency units shall be well lighted. If possible, at least 50 foot candles of illumination should be provided.

19.7.3. If shutoff valves are installed in the water line for maintenance purposes, provisions will be made to prevent accidental shutoff by providing either a sign or a tag at the valve indicating the water supply is for emergency use. The affected supervisor will be notified prior to shutting off the water supply.

19.8. Control Valve and Actuating Mechanism:

19.8.1. The control valve shall be designed to assure the water flow continues without requiring the use of the operator's hands. It shall remain on until intentionally shut off, shall be simple to operate (push-pull), and go from "off" to "on" in 1 second or less. Malfunctioning valves shall be replaced or repaired immediately.

19.8.2. The control valve will be operated by an easily located and readily accessible actuating device, such as a ring and chain attached to the lever or rocking arm of the valve, a walk-on treadle, or a push handle (**Figure 19.5.**).

19.9. Alarms and Lights. Audible alarms or blinking lights may be used to indicate that the unit is in operation. Units in remote areas or where an individual is working alone the area may be equipped with activating valves electrically connected to warning lights or buzzers positioned in occupied areas (dispatch offices, work areas, etc.) to alert personnel when the unit is activated so aid may be sent. In remote areas without electricity, the buddy system will be used in lieu of an alarm system. Supervisors of operations in which the buddy system is to be used will indicate clearly what actions each person is to perform. When in doubt as to the type of buddy system to use, the supervisor should consult the ground safety manager. Buddies should know: the hazards involved in any operation; their duties as buddies; how to use prescribed rescue equipment, and emergency procedures. Remote operations such as missile sites may use the buddy system in lieu of an alarm system.

19.10. Maintenance and Testing:

19.10.1. Permanently-installed shower and eyewash units shall be activated by the supervisor or worker weekly to verify proper operation. The unit only needs to be activated long enough to ensure there is adequate pressure and volume of water available and all orifices are free of obstructions. If a build-up of scale, rust, etc., is **NOTED:,** spray heads or nozzles shall be removed and cleaned or replaced. The source of contamination will be eliminated if possible. Units installed in unoccupied or infrequently used areas are exempt from this testing requirement, but will be tested prior to commencing any operations that could expose personnel to hazardous operations.

19.10.2. The supervisor shall inspect permanently-installed unit monthly and document the inspection using the application portions of paragraph **19.13.** Documentation of the monthly testing will be maintained to show date of test and name of individual performing the test. This documentation may be kept in a log, computerized, or affixed to the equipment by tag or label. (EXCEPTION: Units installed at missile sites shall be tested by the team chief during the most frequently performed periodic inspection requirement established for that system and documentation will be recorded.)

19.10.3. Self-contained units shall be tested and inspected according to the manufactures instructions. Where tap water is used, fluid should be replaced at least monthly. Less frequent intervals of fluid change, as recommended by the manufacturer, are acceptable where a solution or water additive is used. Fluid level will be checked monthly. Missile sites are given the same exception as in paragraph **19.10.2.** Tags or labels will be attached to the unit or adjacent to it, indicating the fluid change schedule.

19.10.4. Eyewash bottles shall have instructions and expiration dates if applicable, permanently affixed to the unit. They shall be tested, refilled, maintained, and disposed of according to the manufacturer's instructions.

19.10.5. All units will be inspected by ground safety and BE staffs during scheduled surveys for proper placement, installation, and documentation of supervisory testing and operation. Inspection personnel will also randomly check employees to see if they have been adequately trained on the use of emergency equipment.

19.11. Training. All employees whose duties expose them to conditions that may warrant the use of this emergency equipment shall be instructed in its use as a part of their job safety training. The initial treatment for a hazardous substance splash should be to wash the affected areas for a minimum of 15 minutes prior to seeking medical treatment. When parts of the body are involved, the clothing should be removed during the showering period. When the eyes are affected, it is important to hold the eyelids open and roll the eyeballs so water will flow on all surfaces and in the folds surrounding the eyeballs. Accomplish this by placing the thumb and forefinger of each hand on the eyebrow and below the eye to provide an open surface for flushing. Keep in mind that a worker can be temporarily blinded by a chemical splash and may be in extreme pain. It is a natural tendency to keep the eyes shut, preventing the benefits of running water. Medical attention shall be sought immediately after using an emergency eyewash and shower.

19.12. Water Supply. When any maintenance is performed that would render an emergency shower or eyewash inoperative, the responsible supervisor shall be notified in advance of the outage and again as soon as service is restored. During the outage the supervisor will assure that self-contained units or eyewash bottles are available for emergency use. If this is not practical, the installation ground safety manager and BEE shall be contacted for guidance.

19.13. Performance Specifications and Installation Requirements for Permanently-Installed Units:

19.13.1. Emergency Showers:

19.13.1.1. The face of the emergency shower head shall be installed no less than 82 inches nor more than 96 inches in height from the surface on which the user stands. The spray pattern shall have a minimum diameter of 20 inches at 60 inches above the surface on which the user stands, and the center of the spray pattern shall be located at least 16 inches from any obstruction. An

exception is that in a combination unit, the eyewash is not considered an obstruction for the purpose of determining the distance of the center of the spray pattern. Multiple-spray emergency shower units (**Figure 19.6.**) are exempt from these requirements and will be installed according to the manufacturer's specifications.

19.13.1.2. Enclosures, if used, shall provide for a minimum unobstructed area 34 inches in diameter in order to accommodate the movement necessary in an emergency situation.

19.13.1.3. Shower actuating devices shall be easy to locate and readily accessible to the user:

19.13.1.3.1. Hand pull devices should be located not more than 69 inches nor less than 55 inches above the surface on which the user stands.

19.13.1.3.2. Push handles and (or) paddles should be approximately 40 inches above the surface on which the user stands.

19.13.1.3.3. Foot treadles should not be more than 6 inches above the walking surface.

19.13.1.4. The shower shall be tested according to the following procedures:

19.13.1.4.1. With water pressure on and the valves closed, check the visible plumbing connections for leaks.

19.13.1.4.2. Ensure the face of the shower head is not less than 82 inches nor more than 96 inches from the surface on which the user stands. Multiple-spray showers are exempt from this requirement.

19.13.1.4.3. Move the valve to the full open position. The valve shall move smoothly and freely and remain open without requiring further attention from the operator.

19.13.1.4.4. With the valve in the "full on" position, the diameter of the spray pattern shall be a minimum of 20 inches at a height of 60 inches above the standing surface. The center of the spray shall be at least 16 inches from any obstructions. Multiple-spray showers are exempt from this requirement.

19.13.2. Eyewash Equipment:

19.13.2.1. Eyewash Units:

19.13.2.1.1. A means shall be provided to ensure a controlled flow of potable water or its equivalent is provided to both eyes simultaneously at a pressure low enough not to be injurious to the user. Normally this can be accomplished by providing a water stream that rises between 6 and 12 inches from the nozzle.

19.13.2.1.2. Nozzles will be protected from contamination, and if protective covers are used, their removal shall not require a separate motion by the operator when activating the unit.

19.13.2.1.3. Units shall be positioned with the water nozzles 33 inches to 45 inches from the surface on which the user stands. Eyewash-actuating devices shall be easy to locate and readily accessible. If a foot treadle is used, it should not be located more than 6 inches above the floor (**Figure 19.5.**).

19.13.2.2. Eye and Face Wash Units. The units (**Figure 19.7.**) shall meet the same criteria as an eyewash unit (paragraph **19.13.2.1.**) except they shall be capable of delivering a greater volume of water. This additional flow is required so the entire surface of the face may be irrigated.

19.13.3. Hand-Held Drench Hoses. Drench hoses (**Figure 19.4.**) support shower and eyewash units but do not replace them. They can be used in cases where the user is in an awkward position physically to reach parts of the face or body that are inaccessible to the fixed stream of the shower or eyewash. Eyes are usually washed with a spent stream which is accomplished by holding the hose up and washing the eye at the point where the stream has minimum pressure.

19.13.4. Combination Units. These units (**Figure 19.1.**) shall be installed so all components can be operated individually from a common water supply line and shall meet the previously stated performance and installation criteria for each component. It is not necessary for all components to operate simultaneously (individual conditions will dictate this requirement).

19.13.5. Self-contained Units. These units (**Figure 19.2.**) shall be constructed of non-corrosive materials, shall provide a minimum of 15 minutes continuous flow and the stored fluid shall be protected against contaminants and temperature extremes. These units may be filled with potable water or a solution approved by either the manufacturer or the installation medical services. Instructions and expiration dates shall be permanently affixed to the unit.

19.13.6. Eyewash Bottles. Eyewash bottles (**Figure 19.3.**) shall have the capacity to deliver immediate flushing to the eyes. Eyewash bottles are not a replacement for other types of emergency equipment. These bottles may be filled with potable water or an eye-flushing solution, either approved by the manufacturer or by installation medical services. Local procedures will be developed to prevent these units from being exposed to extreme temperatures and the instructions and expiration dates shall be permanently affixed to the unit.

Figure 19.1. Permanent Combination Emergency Shower and Face and Eyewash Unit.

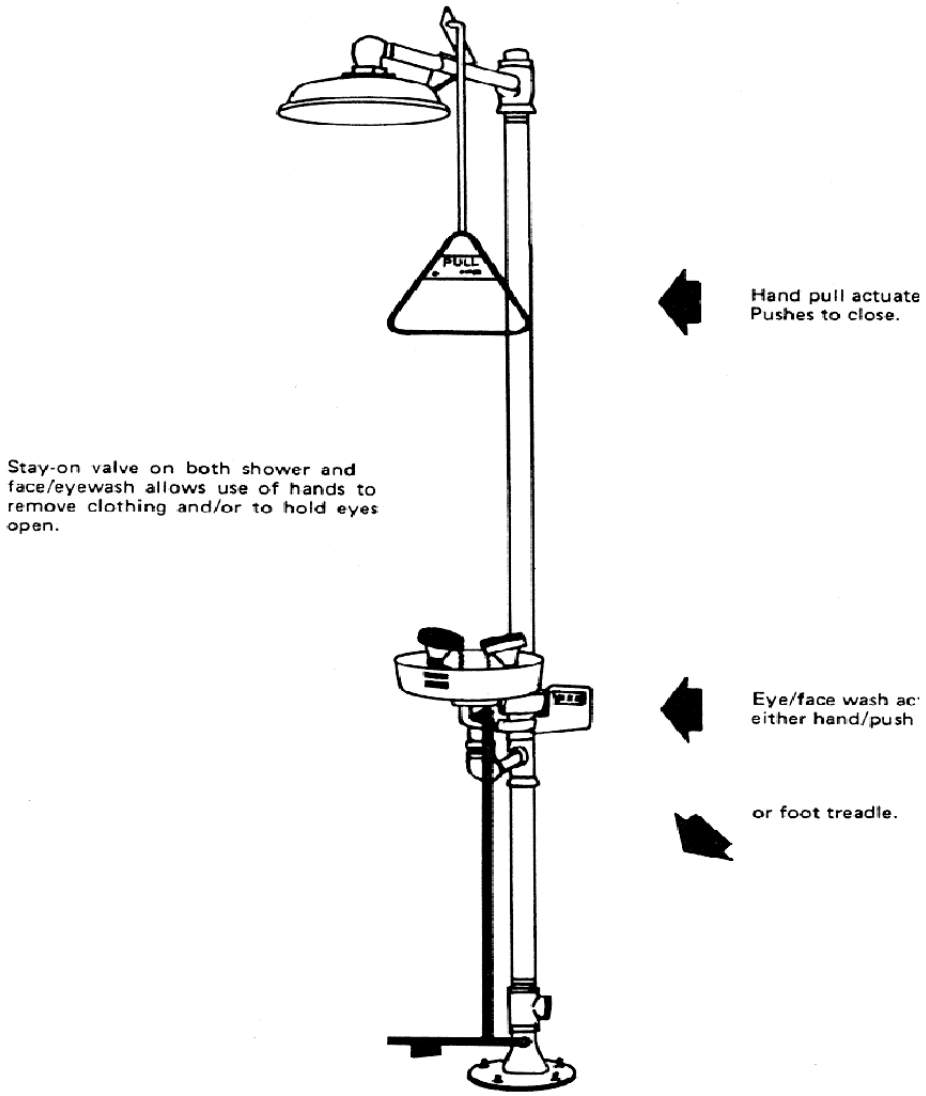

Figure 19.2. Self-Contained Non-Pressurized Eye Wash Unit.

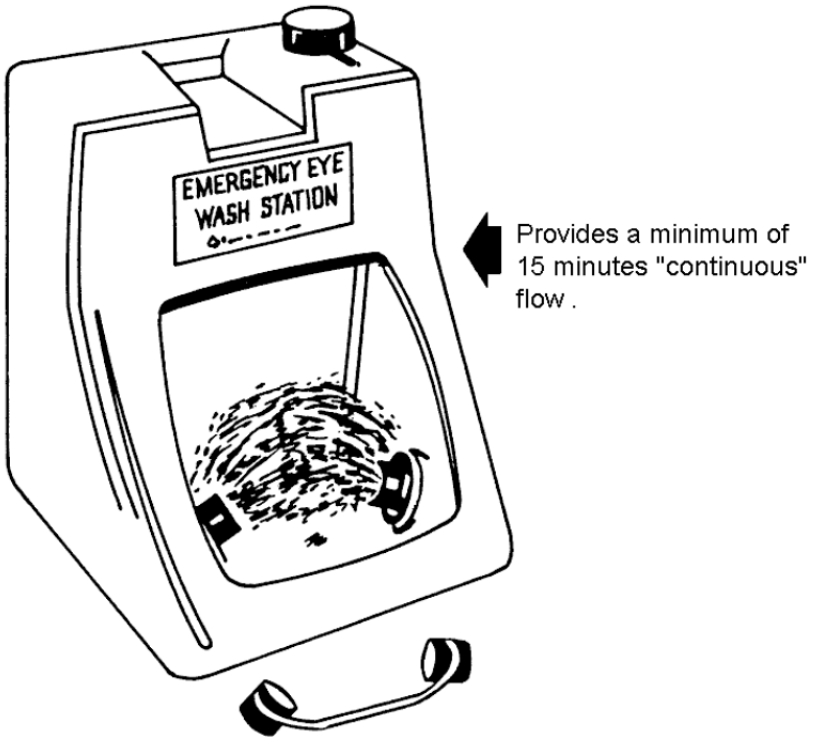

Figure 19.3. Eyewash Bottle.

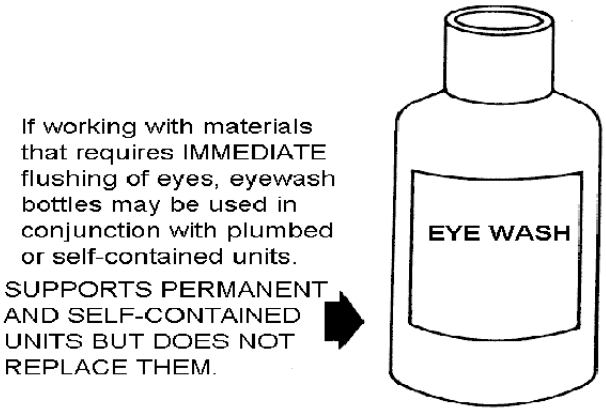

Figure 19.4. Hand-Held Drench Hose (Permanent).

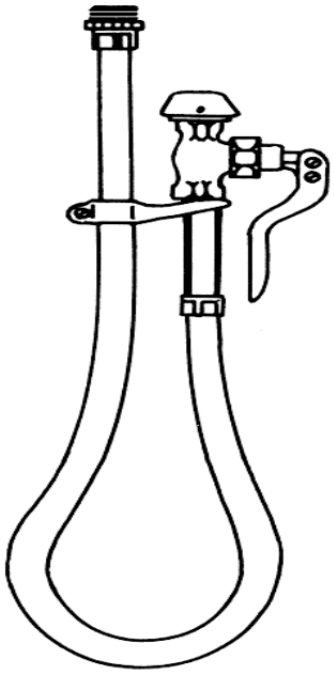

Figure 19.5. Activating Mechanisms.

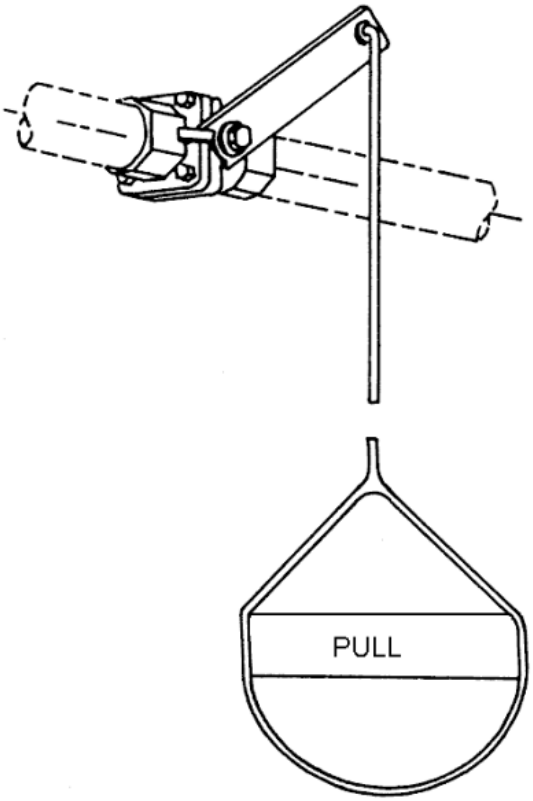

Rigid pull rod and ring for shower.

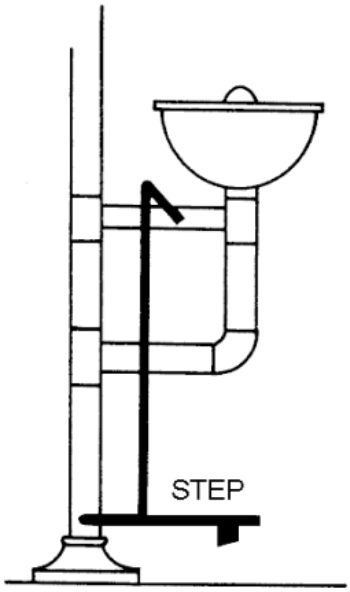

FOOT TREADLE

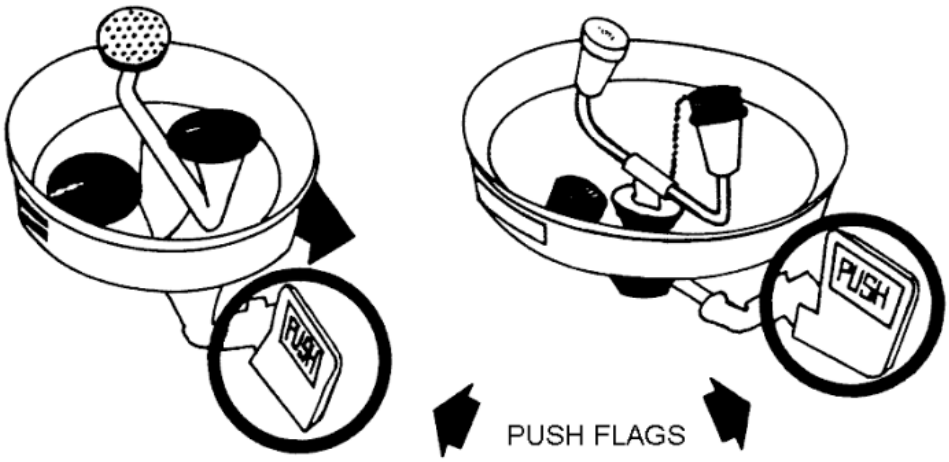

PUSH FLAGS

Figure 19.6. Multiple-Spray Shower and Eyewash.

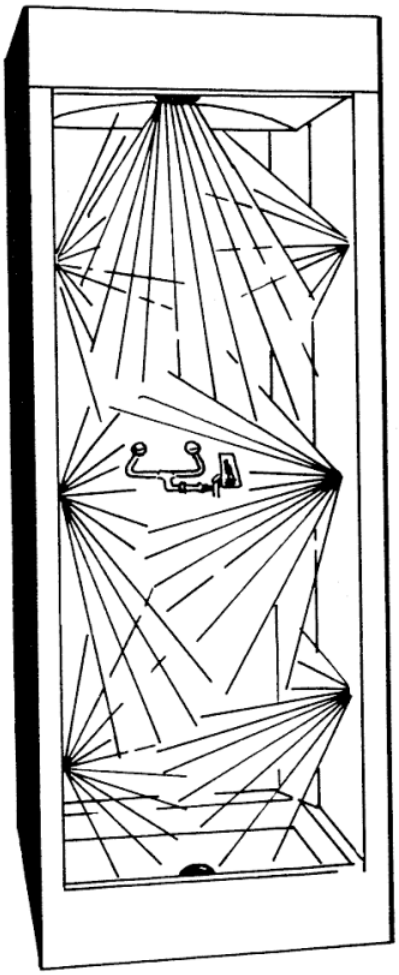

Provides drenching from
a variety of angles

Figure 19.7. Wall-Mounted Permanent Eye and Face Wash.

Preferred over basic eyewash.

Washes entire surface of face and eyes.

Pushes to activate. Stay-on valve frees hands so eyes can be held open for proper irrigation.

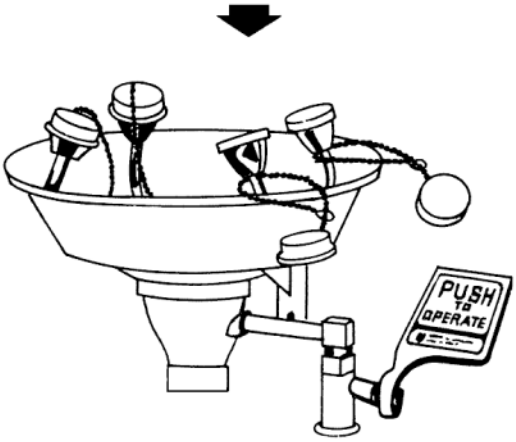

Figure 19.8. Emergency Shower and Eyewash Units Checklist.

This is not an all inclusive checklist. It, like all the checklists in this standard, simply highlights some critical items in the corresponding chapters. Other requirements exist that are not included in the checklist. Where appropriate, MAJCOMs, FOAs DRUs, local safety staffs, and supervisors will add to this checklist to include command or individual location or shop-unique requirements or situations.

F19.8.1. Does installation of emergency shower or eyewash units, after the publication date of the standard, conform to requirements established by the standard? (Reference **19.2.**)

F19.8.2. Have previously installed units that do not meet the criteria of this standard been evaluated by the installation ground safety and BE staffs? (Reference **19.2.**)

F19.8.3. In areas where employees are exposed to severe hazards, are units brought into compliance with this standard? (Reference **19.2.**)

F19.8.4. Do supervisors ensure that emergency showers and eyewashes are provided, inspected, tested, and maintained according to this standard and has the necessity for the unit been evaluated and documented? (Reference **19.3.**)

F19.9. If installed, are hand-held drench hoses used only to support shower and eyewash units and not to replace them? (Reference **19.4.2.**)

F19.9.1. If self-contained units and eyewash bottles are used, is their use approved by the installation ground safety manager and the BEE? (Reference **19.4.3.**)

F19.9.2. If eyewash bottles are provided in areas where employees are working on extremely hazardous operations, are they used only as supplemental protection? (Reference **19.4.4.**)

F19.9.3 Do procuring documents specify that the equipment will meet or exceed ANSI Z358.1 requirements? (Reference **19.5.**)

F19.10. Are emergency shower and eyewash units: (Reference **19.6.**):

F19.10.1. In conspicuously identified accessible locations that do not require more than 10 seconds to reach and are within 100 feet of the corrosive substance? (Reference **19.6.**)

F19.10.2. Located so the water spray does not make contact with any energized electrical circuit? Reference **19.6.**)

F19.11. Is the emergency shower installed in conjunction with, or in close proximity to, the eye and face or eyewash facilities? (Reference **19.6.**)

F19.12. Are the units connected to a supply of water that is free from contamination and equal in purity to potable water? (Reference **19.7.**)

F19.12.1. Is the delivered water temperature in a comfortable range that would not discourage use of the unit? (Reference **19.7.1.**)

F19.12.2. Are self-contained units and the water supply lines of permanently-installed units protected from freezing and from sunlight or other heat sources that could cause extremes in water temperature? (Reference **19.7.1.**)

F19.12.3. Are permanently-installed and self-contained units installed in a fixed location identified with a highly visible sign and are they well lighted? Is highlighting (green and white stripes) of the unit needed to increase visibility? (Reference **19.7.2.**)

F19.12.4. Where shutoff valves are installed on water supply lines to emergency shower and eyewash units, have signs or tags been installed to prevent accidental shutoff? (Reference **19.7.3.**)

F19.13. When actuated, does the water flow remain on without the use of the operator's hands? (Reference **19.8.1.**)

F19.13.1. Is the control valve simple to operate (push-pull) and does it go from "off" to "on" in less than 1 second? (Reference **19.8.1.**)

F19.13.2. Is the actuating device, (pull handle, walk-on treadle, or push handle) readily accessible and easily located? (Reference **19.8.2.**)

F19.14. Do units in remote areas, or where an individual is working alone, have an activating valve electrically connected to warning lights or buzzers positioned in occupied areas to alert personnel when the unit is activated? (Reference **19.9.**)

F19.14.1. If audible alarms or blinking lights are installed to show that the unit is in use, are they working properly? (Reference **19.9.**)

F19.14.2. In remote areas without electricity, is the buddy system used? (Reference **19.9.**)

F19.14.3. When the buddy system is used, are personnel apprised of the hazards involved, what their duties are, how to use rescue equipment, and emergency procedures that are to be followed? (Reference **19.9.**)

F19.15. Do supervisors activate permanently-installed shower and eyewash units monthly to verify proper operation? (Reference **19.10.1.**)

F19.15.1. Are inadequately operating units repaired or replaced? (Reference **19.10.1.**)

F19.15.2. If shower heads or spray nozzles are continually clogging up, has any attempt been made to eliminate the source of contamination? (Reference **19.10.1.**)

F19.15.3. Are units that are installed in unoccupied or infrequently used areas tested prior to commencing any operations that could expose personnel to hazardous substances? (Reference **19.10.1.**)

F19.16. Do supervisors inspect permanently-installed units weekly according to instructions in paragraph **19.10.1.**? Are monthly inspections documented, reflecting the date of test and the individual performing the inspection and (or) test? (Reference **19.10.2.**)

F19.16.1. Is the fluid level of self-contained units checked monthly and changed as required by the manufacturer? Are tags or labels attached to the unit or adjacent to it reflecting the fluid change schedule? (Reference **19.10.3.**)

F19.16.2. Are eyewash bottles maintained according to the manufacturer's instructions? (Reference **19.10.4.**)

F19.16.3. Do installation ground safety and BE staffs inspect emergency shower and eyewash units during surveys? Do they randomly check employees to determine if they have been adequately trained in the use of emergency equipment? (Reference **19.10.5.**)

F19.17. Are employees, whose duties expose them to conditions that may warrant the use of emergency equipment, properly trained? (Reference **19.11.**)

F19.18. When maintenance renders emergency shower or eyewash units inoperable, are adequate measures taken to safeguard employees? (Reference **19.12.**)

F19.19. Is the face of the emergency shower head installed in the 82-96 inches range in height from the surface on which the user stands? (Multiple-spray units are exempt from its requirement.) (Reference **19.13.1.1.**)

F19.20.1. Does the spray pattern of the emergency shower head have a minimum diameter of 20 inches at 60 inches above the surface on which the user stands? (Reference **19.13.1.1.**)

F19.20.2. Is the center of the spray pattern located at least 16 inches from any obstruction? (Multiple-spray units are exempt from this requirement.) (Reference **19.13.1.1.**)

F19.21. Are emergency shower actuating devices easy to locate and readily accessible to the user? (Reference **19.13.1.3.**)

F19.21.1. Are hand pull devices of the emergency shower approximately 55-69 inches above the surface on which the user stands? (Reference **19.13.1.3.1.**)

F19.21.2. Are push handles and (or) paddles of the emergency shower approximately 40 inches above the surface on which the user stands? (Reference **19.13.1.3.2.**)

F19.21.3. Are foot treadles of the emergency shower not more than 6 inches above the walking surface? (Reference **19.13.1.3.3.**)

F19.22. Are emergency showers tested and (or) checked? (Reference 19.12.1.4.)

F19.23. Is a means provided for eyewash units to ensure a controlled flow of potable water or its equivalent to both eyes simultaneously, at a pressure low enough not to be injurious to the user (e.g., 6-12 inches from the nozzle)? (Reference **19.13.2.1.1.**)

F19.23.1. If protective covers are installed to protect the nozzles from contamination, is the removal process automatic so the user only has to push the actuation handle in order to use the eyewash? (Reference **19.13.2.1.2.**)

F19.24.2. Are units positioned with the water nozzle 33 to 45 inches from the surface on which the user stands? (Reference **19.13.2.1.3.**)

F19.24.3. Are the actuating devices easy to locate and readily accessible? (Reference **19.13.2.1.3.**)

F19.24.4. Is the foot treadle, if used, located not more than 6 inches above the floor? (Reference **19.13.2.1.3.**)

F19.25. If installed, does the drench hose provide a controlled flow of water to the eyes or to a portion of the body at a reduced water pressure so the user's eyes, face, or body are not injured? (Reference **19.13.3.**)

F19.26. Are combination units installed so all components can be operated individually from a common water supply line and also meet all the previously stated performance and installation criteria for each component? (Reference **19.13.4.**)

F19.27. Are self-contained units constructed of non-corrosive material? (Reference **19.13.5.**)

F19.27.1. Will they provide a minimum of 15 minutes continuous flow? (Reference **19.13.5.**)

F19.27.2. Is the stored fluid protected against contaminants and temperature extremes and are instructions permanently affixed to the unit? (Reference **19.13.5.**)

F19.28. Do eyewash bottles have the capacity to deliver immediate flushing to the eyes? (Reference **19.13.6.**)

F19.28.1. Are they filled with potable water or an eye-flushing solution, either approved by the manufacturer or by installation medical services? (Reference **19.13.6.**)

F19.28.2. Have procedures been developed to prevent these units from being exposed to extreme temperatures and are the instructions and expiration dates permanently affixed to the unit? (Reference **19.13.6.**)

Chapter 20

SAFETY COLOR CODING, LABELING, AND MARKING FOR PIPING SYSTEMS

20.1. General Information. This chapter establishes minimum requirements for the positive identification of potentially hazardous materials conveyed in piping systems except those sections buried in the ground, concrete, and those pertaining to vehicles or field mobility equipment/systems, etc. This standard requires the application of a color code and a lettered legend identification system positioned in a distinctive manner as a visual aid for marking piping systems which indicates the materials conveyed. Color marking will not be accepted as a substitute for the elimination of hazards by safety engineering, but rather will be used to supplement other established mishap prevention practices.

20.2. Hazards and Human Factors:

20.2.1. Schemes for identification of the contents of piping systems have been developed in the past by a large number of industrial plants and organizations of various kinds. Generally, the standards at an individual location may have given satisfaction to those using them but they also may have suffered from a lack of uniformity. Numerous deaths, injuries to personnel, and damage to property have occurred because of mistakes made in turning valves on or disconnecting pipes at the wrong time or place, particularly when outside agencies were called in to assist. Furthermore, there has been considerable confusion in the minds of those who change employment from one base to another.

20.2.2. In order to promote greater safety, lessen the chances of error, confusion, or inaction, especially in times of emergency, a uniform system for the identification of piping contents has been established to warn personnel when the piping contents are inherently hazardous. Therefore, while this standard has been prepared to specify the identification of the contents of piping systems on the basis of legends, it also suggests the use of color as a supplementary means of identifying the type of hazards of the material contained in the system.

20.2.3. When employees learn to associate various levels of hazards with common colors and lettered legends in piping systems, they are alert to potential hazards. Often, this warning precedes any other warning that may come from the area of the hazard and allows the employee time to avoid the hazard.

20.3. General Requirements:

20.3.1. **Regulatory Federal Requirements** . Essential regulatory requirements are contained in Occupational Safety and Health Administration (OSHA) 29 Code of Federal Regulations (CFR) 1910, Subpart J, *General Environment Controls*, American Society of Mechanical Engineers (ASME) A13.1, *Scheme For The Identification Of Piping Systems*, and American National Standard (ANSI) Z535.1, *Marking Physical Hazards Safety Color Code*, MIL-STD-161G, *Identification Methods For Bulk Petroleum Products Systems Including Hydrocarbon Missile Fuels* and Mil-Std 101B, *DoD Color Code for Pipelines and Compressed Gas Cylinder*, utilize Mil –Std 101B for piping when the agent is not indicated within ASME 13.1. Requirements applicable to hazard identification using color coding and marking are included in this standard.

20.3.2. Marking. The marking of physical hazards by standard warning colors shall not be accepted as a substitute for the elimination of the hazards.

20.3.3. Location. Each location will be carefully evaluated to keep the number of markings at a minimum, thereby providing emphasis for markings which are used and eliminating confusion which results when colors are indiscriminately applied. Locations where all piping contains the same materials (for example — a liquid fuels pump house) minimal marking is required.

20.3.4. **Labeling and Color Coding.** Piping systems shall be labeled and color coded if they contain any of the following materials:

Flammable or easily ignited materials.
Toxic or poisonous gases or materials.
Corrosive materials.
Fire protection materials. (**NOTE:** 1 & 2)
Compressed air at or above 30 pounds per square inch, gauge (psig).
Potable water above 75 psig.
Radioactive substances.
Oxidizing materials.
Steam.

NOTES:

1: Piping systems containing "fire protection materials" only require labeling and not color coding. Paint all exposed interior piping. The color should be the same as the walls and or ceiling, or a complementing color. The use of red paint is not necessary. Exposed piping in fire protection equipment rooms and mechanical rooms and all unexposed piping in the facility may be left unpainted. Exposed plastic interior piping shall only be painted if permitted by its listing and the manufacturer's instructions. Exposed and unexposed stainless steel piping will be cleaned and remain unpainted.

2: Mark all exposed interior fire protection piping at 8-meter (26-foot) intervals with plastic wrap-around-type pipe labels conforming to ASME A13.1-1996, Scheme for the Identification of Piping Systems, indicating the type of fluid carried and direction of flow. Paper, pressure sensitive, or painted on labels are not permitted in new construction. Labels are not required on sprinkler system branch lines and other piping less than 51 millimeters (2 inches) in nominal size. The following legends shall be used on the labels:

— FIRE PROTECTION WATER – used on dedicated potable and non-potable fire protection water supply lines.

— FOAM CONCENTRATE – Used on high-expansion or low-expansion foam concentrate lines.

— FIRE SPRINKLER or SPRINKLER FIRE – Used on standard water-only sprinkler systems.

— HIGH EXPANSION FOAM – Used on lines supplying low-level, high-expansion foam generators.

20.3.5. Method of Identification for Piping Systems:

20.3.5.1. Lettered Legend. Positive identification of a piping system's content will be by lettered legend giving the name of the content in full or abbreviated form in black or white, whichever provides suitable contrast to warning colors. Where the view is unobstructed, legends will be lettered on the two lower quarters of the pipe or covering.

20.3.5.2. Location. Letter legends will be visible from operating positions. Identifications by title and color will be located immediately adjacent to all operating accessories such as valves, regulators, flow checks, strainers, cleanouts, and vents. In addition, primary color warnings will be painted throughout the system at convenient intervals. An arrow shape indicating the direction of flow should appear on piping systems in any installation that is color coded. A double-headed arrow should be placed on lines subject to reverse flow. The lettering sizes will conform to the requirements listed in **Table 20.1.** For pipes smaller than 3/4-inch in diameter, metal tags will be used and will be attached at the same location as color bands would be placed.

20.3.5.3. Color Band. Color bands should completely encircle the pipe or the entire piping system may be painted the designated color.

— The width of a color band may range from 8 to 32 inches according to the pipe diameter as specified in **Table 20.1.**

— Color bands may either be painted on the pipe or the pipe may be wrapped with self-adhesive colored tape.

— At each color band or identification tag (except for electrical conduit), the directions of the flow of the material within the pipe should be indicated by an arrow. The arrow should be the same color as the color used for the lettering (see **Figure 20.1.**).

20.3.5.4. Color Band Location:

— At some locations it may be desirable to code pipes only at junctions or distribution points, while on other systems more frequent markings will be required. In any case, the number and location of identification markings will be based on the particular needs of each system to ensure that the piping system is positively identified.

— Color bands used for pipe identification shall be located at frequent intervals on straight pipe runs, close to valves and changes in directions, and where pipes pass through walls and floors. Color coding bands will be used for fire protection piping sparingly when piping is exposed in areas designed to be suitably pleasing. If desired, the entire piping system may be color coded.

20.3.5.5. Use of Colors. Both primary and secondary warning colors applied to the piping system, either by paint or colored bands, will conform to the requirements listed in paragraph **20.3.5.2.** and 20.2.8.

20.3.5.6. These colors will be used to identify the main classification of the piping content because the colors are readily distinguishable, one from another, under normal conditions.

20.3.5.7. Cryogenics. Labels and paint will flake off pipes carrying liquid oxygen and hydrogen. Metal signs with identification markings will be attached above or hung below cryogenics plumbing by metal bands.

20.3.5.8. Bulk Petroleum Product System and Hydrocarbon Missile Fuels, specific marking guidance for these systems are found in MIL-STD-161F.

20.3.6. **Exact Identification for Piping Systems.** Exact identification of materials in any piping system for hazardous materials and the classification for fire protection is mandatory and shall be made by means of titles lettered in black or white. These titles shall be prominently displayed adjacent to color warnings to prevent errors by personnel. It is recommended, where the view is unobstructed, that titles be lettered on the two lower quarters of the pipe or covering. Lettering in this position is unlikely to be obscured by dust collection or mechanical damage. However, titles should be clearly visible from operating positions, especially those adjacent to control valves. The use of stencils with standard size letters specified in **Table 20.2.** is recommended. For pipelines smaller than 3/4-inch in diameter, the use of securely fastened metal tags, with lettering etched or filled in with enamel, is suggested. It is recommended that titles be applied by use of upper case letters and Arabic numerals whenever applicable.

NOTE: Labeling of containers and fixed systems containing materials not meeting the definition of hazardous or dangerous materials is not required. However, such containers may be labeled when the occupational environment dictates (hospitals, laboratories, etc.). AFOSH Standards 91-8, Medical Facilities, and 91-38, Hydrocarbon Fuels General, will be consulted.

20.3.6.1. The appearance of any of the colors specified in paragraphs 20.2.4. and 20.2.5. on a piping system shall provide a warning of danger from the hazard involved in the system according to the definitions for warning colors specified in this standard. Piping systems which do not require warning colors may be painted to match surroundings (if not in conflict with other color designations of this standard) or such systems may be painted aluminum, black, or remain unpainted.

20.3.6.2. A primary color warning shall appear on all dangerous piping systems and on all fire protection materials. Primary color warnings shall consist of a single color applied as a band or bands which completely encircle the piping system. Color bands shall be applied in conformance with dimensional information in **Table 20.1.** In lieu of color bands, all pipe and covering on an entire system may be painted with the primary color warning if that color is different from the background color. The use of color bands is preferred. In addition, primary color warnings shall be painted throughout the system, where the system passes underground or through walls, and at any other conspicuous places where warnings are required by safety authorities. If desired, operating accessories may also be painted with the primary color warning.

20.3.7. Secondary Warning Color. Any piping system possessing a secondary hazard distinctively different from that indicated by its primary warning color will have a secondary warning color applied. The color of the band will be selected according to the definitions for warning colors specified in this standard. Location on piping systems will be immediately adjacent to all operating accessories such as valves, regulators, flowchecks, strainers, cleanouts, pumps, dispensing points, and vents.

20.3.8. Use of Arrows. Arrows should be used to indicate the normal directions of flow in the system. A double-headed arrow should be placed on lines subject to reverse flow. When used, arrows should appear adjacent to each primary color warning applied to other piping system. When the entire piping system is painted with the primary color warning, the arrow (if desired) should be black or white, whichever contrasts.

20.4. Employee Training. The administrative control established by this standard shall be specifically included in the job safety training required by AFI 91-301.

20.5. Classification of Material in Piping Systems. The classification of materials in a piping system shall be as specified in paragraph **20.3.6.** Examples of legends are found in **Table 20.2.** and color applications in **Table 20.3.**

Table 20.1. Legend and Color Band Dimensions.

Outside Diameter of Pipe or Covering (Inches)	Length of Color Field A**	Size of Legend Letters And Numerals (Inches) B**
Less than ¾”		See Reference paragraph **20.3.6.**
¾” to 1-1/4”	8”	½”
1-1/2” to 2”	8”	¾”
2-1/2” to 6”	12”	1-1/4”
8” to 10”	24”	2-1/2”
Over 10”	32”	3-1/2”
Over 13”	32”	3-1/2”

*Stencils or decals may be used.

See **Figure 20.1.

Figure 20.1. Exact Identification Always by Name of the Material Contained.

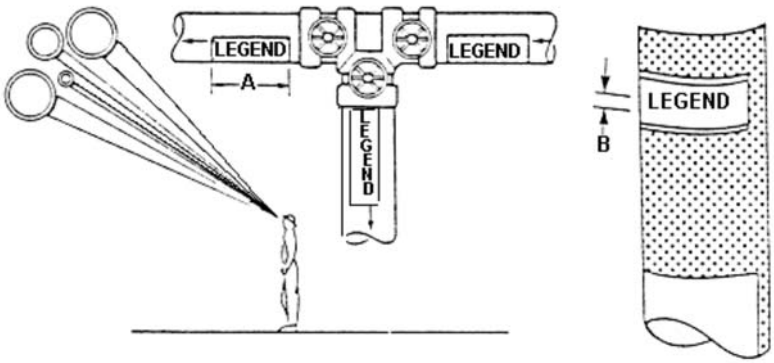

Table 20.2. Examples of Legend.

"HOT WATER"	"HYDRAULIC OIL"
"SLURRY"	"FOAM"
"AIR 100 PSIG"	"CARBON TETRACHLORIDE"
"ARGON 500 PSIG"	"CAUSTIC"
"H.P. RETURN"	"STEAM 100 PSIG"
"PROPANE"	"SULFURIC ACID"

Table 20.3. Classification of Hazards of Materials and Designation of Colors[1]. Reference detailed descriptions in paragraph 20.3.6.

Classification	**Color Field**	**Color of Letter For Legend**
Materials Inherently Hazardous		
Flammable or Explosive	Yellow	Black
Chemically Active or Toxic	Yellow	Black
Extreme Temperatures or Pressures	Yellow	Black
Radioactive [2]	Yellow	Black
Materials of Inherently Low Hazard		
Liquid or Liquid Admixture[3]	Green	White
Gas or Gaseous Admixture	Blue	White
Fire Quenching Materials		
Water, Foam, CO2, Halon, etc.	Red	White

NOTES:

1. When the color scheme above is used the colors should be as recommended in ANSI 535.1 latest revision, Safety Color Code.
2. Previously specified radioactive markers using yellow and purple are acceptable if already installed and/or until existing supplies are depleted, subject to pertinent Federal Regulations.
3. Markers with lack letters on a green color field are acceptable if already installed and/or until existing supplies are depleted.

Figure 20.2. Safety Color Coding, Labeling, and Marking For Piping Systems Checklist.

This is not an all inclusive checklist. It, like all the checklists in this standard, simply highlights some critical items in the corresponding chapters. Other requirements exist that are not included in the checklist. Where appropriate, MAJCOMs, FOAs DRUs, local safety staffs, and supervisors will add to this checklist to include command or individual location or shop-unique requirements or situations.

F20.2. Is each location evaluated and the number of markings kept at a minimum? (Reference **20.3.3.**)

F20.3. Are piping systems labeled and color coded if they contain: (Reference **20.3.4.**)

Flammable or easily ignited materials?

Toxic or poisonous gases or materials?

Corrosive materials?

Fire protection materials?

Compressed air at or above 30 psig?

Potable water above 75 psig?

Radioactive substances?

Oxidizing materials?

Steam?

F20.4. Do the colors used to distinguish the hazard potential of piping systems conform to those in this standard? (Reference **20.3.5.3.** – **20.3.5.6.**)

F20.5. Does the method of identification of piping systems conform to the requirements in paragraph **20.3.6.**?

F20.6. Are hazardous materials in piping systems identified per requirements in paragraph **20.3.6.**? Are these titles lettered in black or white only, in clearly visible locations, and in at least the sizes recommended? (Reference **20.3.6.**)

F20.7. Are secondary hazards identified as required in paragraph **20.3.7.**?

F20.8. Is the administrative control established by this standard included in job safety training required by AFI 91-301? (Reference **20.4.**)

F20.9. Is material in a piping system classified per the requirements in paragraph **20.5.**, using **Table 20.1.**, **Figure 20.1.**, **Table 20.2.** & **Table 20.3.** of **Chapter 20**?

Chapter 21

HAZARDOUS ENERGY CONTROL (LOCKOUT AND TAGOUT) AND MISHAP PREVENTION SIGNS AND TAGS.

21.1. General Information. This chapter explains Air Force requirements for the use of safety, health, and fire prevention signs and tags. It applies to all work environments, but is not intended to cover signs or tags unique to aircraft, motor vehicle, railroad, or marine operations. This chapter also covers the Air Force program for the control of hazardous energy (lockout and tagout). It applies to the industrial environment and does not cover construction, agriculture, or maritime employment or electric power generation, transmission, and distribution facilities. After Jan 2, 1990, whenever replacement or major repair, renovation or modification of a machine or equipment is performed, and whenever new machines or equipment are installed, energy isolating devices for such machine or equipment shall be designed to accept a lockout device.

21.1.1. This chapter establishes uniform requirements for the use of signs and tags to inform Air Force (AF) personnel of immediate, existing, or potential hazards which may produce occupational injury or illness. It also establishes requirements to prevent unexpected start-up of machines or equipment through the lockout or tagout of energy isolation devices.

21.1.2. The chapter adopts the occupational safety and health signs contained in OSHA Standards 29 CFR 1910.144, *Safety Color Code for Marking Physical Hazards*; 1910.145, *Specifications for Accident Prevention Signs and Tags*; and 1910.147, *The Control of Hazardous Energy (Lockout/Tagout)*. There may be other signs or tags prescribed in existing Air Force directives to cover specific hazards and such signs or tags should be brought to the attention of HQ AFSC/SEGS.

21.1.3. This chapter establishes a requirement for procedures, periodic inspection, and training for an energy isolation (lockout or tagout) program. It also establishes the basic principles of the design, fabrication, and use of general hazard identification tags in the Air Force occupational environment. The general hazard identification tags prescribed herein satisfy the hazard notification requirement established by AFI 91-301 and will be used when such notification is required.

21.2. Hazards. Signs and tags are used to provide information. If the message is understood, the sign or tag will serve a useful purpose. If the message is not understood, the sign or tag may do more harm than good. When properly used, they warn of danger, caution personnel, or provide information. Personnel responsible for identifying and installing signs and tags must be knowledgeable of the operational situation and ensure the correct message is conveyed. Signs and tags are not intended as substitutes for preferred abatement methods such as engineering controls, lockout procedures, substitution, isolation, or safe work practices. Rather, they are additional safety guidance and increase the employee's awareness of potential hazards.

21.3. General Requirements:

21.3.1. When and Where to Use Safety, Fire Prevention, and Health Signs. To be effective, signs must convey a clear concise message, be visible to all, be standardized to the maximum extent, and get the attention of personnel in the immediate area.

21.3.1.1. The location of these signs is important. They should not be located in any place that could result in blockage of exits or in any place where other personnel could be injured. It is gen-

erally advisable to place signs slightly above eye level (approximately 5 feet 6 inches), but specific situations may require alternative locations. Signs shall be posted sufficiently ahead of a particular hazard (if possible, at least 5 feet before the hazard) so an employee will read the sign and react to the warning before encountering the posted hazard.

21.3.1.2. The lettering shall be of sufficient size and contrast to make it readily visible and legible (**Table 21.1.**).

21.3.1.3. Signs should not be placed on movable objects such as doors, windows, and racks where a change in position would void the purpose of the sign.

21.3.1.4. Pictorial signs are generally better understood than those using words, but, there is not a standardized set of industrial workplace pictorial safety signs in use in the United States. Because of this, commercial signs contain both words and symbols, and at times, words only. Where signs are intended to convey information to non-English speaking or reading persons, bilingual graphics should be considered.

21.3.2. When and Where to Use Safety, Fire Prevention, and Health Tags. Tags are a temporary means of warning all concerned of a hazardous condition, defective equipment, etc. Tags are not to be considered as a complete warning method, but should only be used until a positive means can be employed to eliminate the hazard. For example, a “Do Not Start” tag affixed to a machine is only a temporary warning that shall be used until the machine can be locked out, deenergized, or inactivated (29 CFR 1910.147). No servicing or maintenance will be performed until an approved lockout device is installed.

21.3.3. When and Where to Use Lockout Devices. Lockout devices are a positive means to isolate energy and prevent the unexpected start-up of machines and equipment. Energy sources shall be locked out prior to the start of inspection, maintenance, or servicing actions which require the removal of guards and will remain locked out until all activities are complete.

21.3.4. Procedures. Procedures shall be developed and documented for the safe and proper use of locks and tags on energy isolating devices (paragraph **21.8.**).

21.3.5. Training. A training plan shall be developed to provide initial and recurring training on lockout and tagout procedures (paragraph **21.6.2.**).

21.3.6. Inspection. The shop supervisor shall conduct an annual inspection of the lockout or tagout program to ensure the procedures and training requirements of this standard are being followed.

21.3.7. Sources of Signs. Standard commercial signs should be used whenever possible rather than locally making them.

21.3.8. Sources of Tags. All mishap prevention tags shall be standardized Air Force forms. Air Force tags meeting the requirements of OSHA 29 CFR 1910.145 are listed in paragraph **21.5.** and are available through normal form distribution channels.

21.3.9. Availability of Safety Signs, Tags, and Locks. The functional manager or supervisor is responsible to ensure that safety signs, tags, and locks are available in adequate supply.

21.4. Specifications For and Usage of Signs:

21.4.1. Standard Proportions for Signs. Commercially manufactured signs are designed and proportioned for readability and should be procured when possible. If it is necessary to locally make signs, the recommended dimensions and proportions listed in **Table 22.1.** through **Table 22.6.** will be used.

21.4.1.1. Identification signs shall be furnished with rounded or blunt corners and shall be free from sharp edges, burrs, splinters, or other sharp projections. The ends of heads of bolts or other fastening devices shall be located in a way that does not constitute a hazard.

21.4.1.2. Hazard identification signs are made up of three elements: the symbol, hazard warning, and instruction text. The instruction text is an integral part of the sign panel. Color specifications contained within this standard are according to OSHA 29 CFRs 1910.144, and 1910.145.

21.4.1.3. All safety signs shall be printed in English and should also be printed in the predominant language of non-English reading workers. Where established symbols exist, they should also be considered. Workers unable to read posted signs should receive information regarding hazardous areas and should be informed of the instructions printed on the signs.

21.4.2. Criteria for Warning Colors. The criteria of this standard shall apply to the use of safety color coding for warning signs and markers. The intent is to establish a safety color code that will alert and inform persons to take precautionary action or other appropriate action in the presence of a hazard (see paragraph 22.9. for examples of color applications).

21.4.2.1. Black or White. Black or white is used for lettering to provide contrast with the basic warning colors. Black lettering shall be used on a yellow, white, or orange background. White lettering shall be used on a red, green, or black background.

21.4.2.2. Green:

21.4.2.2.1. Green shall be the basic color for designating safety and first-aid equipment locations. Solid green, green and white stripes, green cross on white background, or white cross on green background can be used.

21.4.2.2.2. Green is also used for identifying compressed gas cylinders and piping systems containing oxidizing materials.

21.4.2.3. Magenta:

21.4.2.3.1. Magenta is used for lettering piping systems containers, housings, equipment, etc., containing radioactive substances.

21.4.2.3.2. Approved tags and signs exhibiting the standard, 3-bladed magenta radiation symbol on a yellow background shall be used to identify the nature and magnitude of the radiation hazard, together with specific hazard control instructions.

21.4.2.4. Orange. Orange shall be used as the basic color for designating electrical conduit and unguarded, dangerous parts of machines or energized equipment which may cut, crush, shock, or otherwise injure and to emphasize such hazards when guards around the equipment are open or removed, exposing an unguarded hazard to employees.

21.4.2.5. Red or Lime Yellow. Red or lime yellow shall be the basic color for the identification of fire prevention equipment, danger, and stop. Fire hydrants shall be painted according to instructions in applicable AF 32-series instructions.

21.4.2.6. Yellow. Yellow shall be the basic color for designating caution, flammable materials, and for marking physical hazards, such as strike against, stumble, trip, fall, and caught-between types.

21.4.2.7. Solid Yellow, Yellow and Black Stripes, and Yellow and Black Checks. These colors and color combinations may be used interchangeably, using the combination which will create the most attention for the designation of traffic, housekeeping, or aisle markings.

21.4.3. Specifications:

21.4.3.1. The size of lettering to be used for the wording or message of the sign should be as large as possible but consistent with good balance and legibility. **Table 21.1.** shows the distances at which well-proportioned letters of different heights can be read by persons with 20/40 visual acuity under good lighting conditions.

21.4.3.2. The color, proportions, and location of the identification panels on each sign shall be regarded as standard. The ratio of the depth of the identifying panel (danger, caution, etc.) to the width of the sign shall be as established in **Table 21.1.** for all sign sizes not covered in the tables.

21.4.3.3. Each sign shall be provided with a reliable light source either natural or artificial giving a value of not less than 5-foot-candles on the illuminated surface of the sign. The illumination of exit signs shall be continuous during all times in which building occupancy may require that the means of egress be available for use.

21.4.4. Types of Signs, Their Color Identification, and Use: For Laser Hazard Warning Sign and Labels reference AFOSH Standard 48-139 and ANSI 136.1-2000. The DoDi 6055.1 outlines military exemption for laser HAZCOM.

21.4.4.1. Signs Used to Identify the Fire Hazards of Materials. A standardized system exists in the United States for identifying the hazards of materials in terms of three categories: health hazard, flammability hazard, and reactivity hazard. The system may be used by the fire department at continental United States (CONUS) installations and is explained in detail in National Fire Protection Association (NFPA) 704, *Identification of the Fire Hazards of Materials*. Organizations desiring to use these signs shall consult the installation fire department for additional information.

21.4.4.2. Signs and Symbols Used to Identify Explosive Materials. A standard system exists in the AF and North Atlantic Treaty Organization (NATO) to identify items and substances assigned to United Nations (UN) dangerous goods Class I (explosives, munitions, propellants, and pyrotechnics). Signs and symbols are used to categorize explosives according to the hazard they present and are explained in AFMAN 91-201.

21.4.4.3. AF Form 1118, *Notice of Hazard*. The Notice of Hazard is considered a sign and is posted at or near the identified hazard until it is corrected. Standard colors for these signs are black letters on a white background with a red border. Refer to AFI 91-301 for detailed instructions on the use of this sign.

21.4.4.4. Asbestos Warning Signs. The warning signs required for asbestos shall conform to the requirements of OSHA 29 CFR 1910.1001, *Asbestos*, and AFOSH Standard 48-8, *Controlling Exposures To Hazardous Materials*.

21.4.4.5. Danger Signs. Danger signs shall be used to indicate an immediate hazard. The sign shall be of red, black, and white colors as shown in **Figure 21.1.** and shall be of the appropriate size as set forth in **Table 21.1.** Examples of messages for Danger signs are shown in **Table 21.7.**

21.4.4.6. Caution Signs. Caution signs shall be used to warn of a potential hazard. The sign shall be of yellow and black colors and designed as shown in **Figure 21.2.** with dimensions as given in **Table 21.3.**

21.4.4.7. Radio Frequency Radiation Warning Signs. Radio frequency radiation warning signs shall be used to signify the presence of hazardous electromagnetic energy of frequencies from 10 megahertz to 100 gigahertz. Radio frequency radiation warning signs shall define specific radio frequency hazards and provide warning data or instructions about the hazard. The wording "WARNING - RADIO FREQUENCY HAZARD" shall appear in the upper triangle as specified in AFOSH Standard 48-9, *Radio Frequency Radiation (RFR) Safety Program*.

21.4.4.8. Exit Signs. Exit signs will be used to clearly identify the means of egress from facilities when required. The signs will conform to the design and color requirements contained in Engineering Technical Letter (ETL) 99-4, *Fire Protection Engineering Criteria--Emergency Lighting and Marking of Exits*, and NFPA 101, *The Life Safety Code*, Chapter 5.

21.4.4.9. Directional Signs. Directional signs other than emergency type exit signs shall be used to indicate the way to stairways, medical offices, health stations, emergency showers, etc. They shall be black and white and designed as shown in **Figure 21.3.**, with dimensions as specified in **Table 21.5.**

21.4.4.10. Instruction and Identification Signs. Instruction and Identification signs shall be used where there is a need to convey general instructions or to identify personal protective equipment or systems. The design of these signs shall be as shown in **Figure 21.4.**, with dimensions as shown in **Table 21.4.** The colors shall be green and white, preferably white letters on a green background.

21.4.4.11. Biological Hazard Warning Signs. Biological Hazard warning signs shall be used to signify the actual or potential presence of a biological hazard and to identify equipment, containers, rooms, experimental animals, etc., which contain or are contaminated with viable hazardous agents. The symbol on these signs shall be the standard fluorescent orange or orange-red color. Background color is optional as long as there is sufficient contrast for the symbol to be clearly defined. The symbol may be used on signs, warning tags, or identification labels. Appropriate wording may be used with the biological symbol to indicate the nature or identity of the hazard. Appropriate wording shall indicate precautionary information and the name or job classification of the individual responsible (such as chemical or laboratory supervisor) for control of the biological hazard. This information shall never be superimposed on the symbol. The design of these signs shall be as shown in **Figure 21.5.** The size of letters used on Biological Hazard warning signs shall be according to specifications in **Table 21.1.**

21.4.4.12. Ionizing Radiation Warning Signs, Placards, and Forms. Reference TO 00-110N-3, *Requisition, Handling, Storage, and Identification of Radioactive Material.*

21.4.5. Relationship Between AF Form 1118 and AF Form 979:

21.4.5.1. The AF Form 1118, Notice of Hazard, in the context of this standard, is a danger sign used to permanently identify the existence of a hazardous condition that could result in death, disability, or a lost workday mishap—Risk Assessment Code (RAC) 1 through 3. The AF Form 1118

can only be issued by qualified ground safety, fire prevention, or health officials. Removal is authorized only upon correction of hazard and verification by the issuing authority. Refer to AFI 91-301 for instructions for preparing AF Form 1118.

21.4.5.2. The AF Form 979, Danger Tag, is a temporary means of identifying the same conditions and can be issued by the supervisor as well as qualified ground safety, fire prevention, or health officials. The Danger Tag provides a means for workplace supervision to immediately alert employees to a real or perceived danger. Posting an AF Form 1118 at or in the immediate vicinity of the hazardous condition constitutes authority to remove the AF Form 979.

21.5. Specifications For and Use of Tags:

21.5.1. General Instructions. The following apply to all Air Force tags prescribed by this standard. Requirements that are unique to a particular tag will appear in the instructions for that tag.

21.5.1.1. User Instructions. Any AF employee who becomes aware of an unsafe condition will immediately advise the work area supervisor of that condition.

21.5.1.1.1. Notification requirements do not apply when Danger tags are installed as a result of TO, instruction, or other directed requirements, including routine maintenance functions on aircraft or missile systems.

21.5.1.1.2. Ground safety, fire department, and (or) bioenvironmental engineering (BE) officials are **not** required to be contacted when tags are used during routine maintenance or servicing. For example: ground safety personnel need not be notified when tagging out the circuit breaker of an air compressor where the motor has been removed for bearing replacement or when machines or equipment are locked out for maintenance or servicing.

21.5.1.1.3. Supervisors will determine whether a tag is needed and, if so, that the appropriate tag is attached as required. They will coordinate the placement of tags, and the assignment of RAC, with the installation ground safety, fire department, or BE officials (as appropriate). Tag-issuing responsibility is assumed by the supervisor or the person in charge at that time. If the responsible supervisor is not available, the employee will phone ground safety, fire department, or BE personnel (as appropriate) and request assistance.

21.5.1.1.4. Equipment records, when maintained, should be annotated to reflect current status. Tag logs may be maintained to identify tags currently in use.

21.5.1.2. Supervisor Action. The supervisor will evaluate the situation and initiate appropriate action. The supervisor will consult the installation ground safety, fire department, or BE personnel, as appropriate.

21.5.1.2.1. Assignment of RAC is a responsibility of the personnel in these offices. A RAC will not be assigned to tags issued during routine maintenance or servicing (for example, TO-directed tagging of the starter switch during engine maintenance does not require assignment of a RAC).

21.5.1.2.2. Verification of RAC (when required by AFI 91-301) will be accomplished as soon as possible and should not exceed 10 days from hazard identification.

21.5.1.2.3. Tag placement will not be delayed awaiting RAC verification. Changing an initial tag from Danger to Caution, Out of Order, Do Not Start, etc., or vice-versa, is the responsibil-

ity of the supervisor upon verification of RAC by the installation ground safety, fire department, or BE personnel.

21.5.1.2.4. Local commanders will implement internal procedures for accomplishing effective coordination between supervision and ground safety, fire prevention, and health personnel.

21.5.1.3. Removal. The supervisor, with coordination from the installation ground safety, fire department, or BE personnel, as appropriate, is responsible for removing the tag. This action shall be taken only after the unsafe condition has been corrected. This individual will annotate the appropriate maintenance record, if maintained for the equipment, that the condition has been eliminated and the tag removed. The responsible installation ground safety personnel will be notified during normal duty hours that the tag has been removed. Notification will not be later than the following duty day.

21.5.2. Types of Tags, Their Color Identification, and Use. The mishap prevention tags prescribed by this directive (Danger, Caution, Out of Order, and Do Not Start) meet the requirements of AFI 91-301 and OSHA 29 CFR 1910.145.

21.5.2.1. AF Form 979, Danger Tag (**Figure 21.6.**). There shall be no variation in the type of design of tags posted or hung to warn of specific dangers. Any AF employee who becomes aware of a hazard that may require RAC 1 through 3 classification will immediately advise the work area or activity supervisor and qualified ground safety, fire prevention, and health officials of the unsafe condition. They will determine the specific precautions that are required and the RAC classification. Routine aircraft or missile maintenance actions required by TOs or instructions will not be coordinated with ground safety, fire department, or BE personnel.

21.5.2.2. How to Determine When to Use. See AFI 91-301 and the instructions below:

21.5.2.2.1. Danger Tags shall only be used where an immediate hazard (RAC 1 through 3) exists and specific precautions are required to protect personnel or property—or as required by TOs, instructions, or other directed requirements.

21.5.2.2.2. All employees shall be instructed that Danger Tags indicate immediate danger and that special precautions are necessary.

21.5.2.2.3. A Danger Tag shall be placed on damaged equipment and immediate arrangements made for the equipment to be taken out of service and sent to the repair shop. The wording should read “DO NOT USE THIS EQUIPMENT” or “DEFECTIVE EQUIPMENT, DO NOT USE”.

21.5.2.3. Removal. Only the supervisor may remove the AF Form 979, Danger Tag. Removal will be accomplished only if the hazard has been abated. The responsible installation ground safety personnel will be notified during normal duty hours that the tag has been removed. Notification will not be later than the following duty day. Removal of Danger Tags prescribed by TOs or instructions for routine aircraft or missile maintenance actions need not be coordinated with ground safety, fire department, or BE personnel.

21.5.2.3.1. Text and Reverse Side. The text will be provided by, and the reverse side completed by, the responsible on-duty supervisor (refer to **Figure 21.10.** and paragraph **21.5.3.**).

21.5.2.4. AF Form 980, Caution Tag (**Figure 21.7.**):

21.5.2.4.1. When to Use. AF Form 980, Caution Tag, shall be used by any AF employee, in coordination with the work area or activity supervisor, only to warn personnel against potential hazards or to caution against unsafe practices, and to prescribe the precaution that will be taken to protect personnel and property from mishap probability. All employees shall be instructed that Caution Tags indicate a potential hazard and proper precautions shall be taken. The placement of Caution Tags, and assignment of RAC, will be coordinated with the installation ground safety, fire department, or BE personnel (as appropriate). Routine maintenance actions required by TOs or AFI 32-1064, *Electrical Safe Practices*, will not be coordinated with ground safety, fire department, or BE personnel.

21.5.2.4.2. Removal. Caution Tags shall only be removed by the work area or activity supervisor when the hazard is abated. If the placement of the tag was coordinated with ground safety, fire department, or BE personnel as required in paragraph **21.5.2.2.1.**, the supervisor will coordinate with these agencies prior to removal. When the Caution Tag is used for permanent notice, the supervisor is responsible for the tag and for furnishing the protective devices (eye, noise, etc.) required by the Caution Tag.

21.5.2.4.3. Text and Reverse Side. The text will be provided by, and the reverse side completed by, the responsible on-duty supervisor. (Refer to **Figure 21.11.** and paragraph **21.5.3.**)

21.5.2.5. AF Form 981, Out of Order Tag (**Figure 21.8.**). Out of Order tags shall only be used for the specific purpose of indicating that a piece of equipment, machinery, utility, or system is out of order and to attempt to use it might present a hazard. If it is reparable and the TO prescribes a green tag, this is a satisfactory substitute.

21.5.2.5.1. When to Use. In some cases, the equipment or machinery which has an Out of Order Tag placed upon it may have to be physically removed to a nonserviceable impound area. The placement of Out of Order Tags will be coordinated with the installation ground safety, fire department, or BE personnel (as appropriate). When applicable equipment records are available, they will be annotated in addition to completing the requirements established for the Out of Order Tag. If turning on the equipment could result in an injury or damage, the energy source should be locked out per paragraph **22.6.1.** of this standard.

21.5.2.5.2. Removal. Out of Order Tags shall only be removed by the supervisor assuming responsibility for the tag and only after the condition has been satisfactorily corrected. Coordination with the ground safety, fire department, or BE personnel (as appropriate) is optional, prior to removal of the tag.

21.5.2.5.3. Text and Reverse Side. The text will be provided by, and the reverse side completed by, the responsible on-duty supervisor. (Refer to **Figure 21.12.** and paragraph **21.5.4.**)

21.5.2.6. AF Form 982, Do Not Start Tag (**Figure 21.9.**). When an AF Form 979, Danger Tag, is attached to equipment, it is not necessary to retag the equipment with an AF Form 982, Do Not Start Tag.

21.5.2.6.1. When to Use. AF Form 982, Do Not Start Tag, shall only be used to alert personnel to the hazards associated with the restarting of the equipment. The tag will only be used for a few moments or a very short time until the energy isolating device in the system can be locked out. Do Not Start Tags shall be placed in a conspicuous location or shall be placed in such a manner that they effectively block the starting mechanism which would cause hazardous conditions should the equipment be energized.

21.5.2.6.2. Removal. Do Not Start Tags shall only be removed by the supervisor and only after the condition has been satisfactorily corrected.

21.5.2.6.3. Text and Reverse Side. The text will be provided by, and the reverse side completed by, the responsible on-duty supervisor. (Refer to **Figure 21.10.** and paragraph **21.5.3.**)

21.5.3. How to Fill Out the Reverse Side of AF Forms 979, 980, and 982 (**Figure 21.10.** and **Figure 21.11.**):

21.5.3.1. Installation or Facility. Name of installation, facility, or annex where the form is to be used.

21.5.3.2. Safe Clearance Number. For use during electrical work procedures (see AFI 32-1064).

21.5.3.3. Line or Equipment Involved. This space will contain a brief description of the equipment or machine involved (see AFI 32-1064).

21.5.3.4. Abnormal and Special Conditions. These spaces are used during electrical work procedures (see AFI 32-1064).

21.5.3.5. Time and Date. Self-explanatory.

21.5.3.6. Name, Organization, and Phone Number. Print the name of the supervisor placing the tag on the equipment or machine. See AFI 32-1064 for space requiring information on individual ordering the placement of tags.

21.5.4. How to Fill Out the Reverse Side of AF Form 981 (**Figure 21.12.**).

21.5.4.1. Items 1 through 4 (Part I) will be completed by the individual who identified the hazard. Items 5 through 7 (Part II) will be completed by the responsible supervisor. The procedures outlined in paragraph 22.5.4.2. are advisory rather than mandatory.

21.5.4.2. MAJCOMs have the authority to supplement these procedures as needed to meet local conditions. Prior to completing Part II, the supervisor shall coordinate with the responsible functional manager for those situations requiring more than 30 calendar days to correct (refer to AFI 91-301). Hazards assigned RAC 1, 2, or 3 requiring more than 30 calendar days to correct are entered into the installation's formal hazard abatement plan using AF Form 3, Hazard Abatement Plan, and may require posting of AF Form 1118.

21.5.4.2.1. Time. Self-explanatory.

21.5.4.2.2. Date. Self-explanatory.

21.5.4.2.3. Shop or Office symbol. Example: 36 ABW/LGT.

21.5.4.2.4. Grade, Name, and Phone. Print the grade, name, and phone number of the person who placed the tag. Example: TSgt J. Smith, 1810. (Add the supervisor's name and phone number as a second name underneath.)

21.5.4.2.5. Risk Assessment Category (RAC). Hazard Severity and Mishap Category. (Example: RAC 2 coordinated with ground safety, fire prevention, and BE personnel.)

21.5.4.2.6. Verification Date. Date verified by installation ground safety, fire prevention, and BE personnel.

21.5.4.2.7. Functional Manager Number. Functional manager number assigned on AF Form 3. Example: 36 ABW/LGT. Refer to AFI 91-301 for complete guidance.

NOTES:

1: Items 5, 6, and 7 may be left blank on AF Form 981.

2: When AF Forms 979, 980, and 982 are used by civil engineering personnel according to instructions in AFI 32-1064, coordination with and notification of ground safety, fire department, and BE personnel are not required.

21.6. Specifications for and Usage of Lockout and Tagout Devices:

21.6.1. Procedures. (See paragraph **21.7.** for sample procedures.) Lockout and tagout procedures shall only be performed by authorized personnel. Personnel in the area not directly affected by the operation or shutdown of the machine or equipment shall be notified by the supervisor of lockout or tagout devices. Notification shall be given before the controls are applied and after they are removed from the machine or equipment. The established procedure for the application of locks or tags shall cover the following elements and be performed in the following order.

21.6.1.1. Before a supervisor or the operator turns off a machine or equipment, they shall have knowledge of the type and magnitude of the energy source, the hazards of the energy source to be controlled, and the method or means to control the energy source.

21.6.1.2. The machine or equipment shall be turned off or shut down using the normal stopping and shutdown procedures (depress stop button, open toggle switch, close shut off valve, etc.). A machine or other equipment using a simple wall plug as the power source will be unplugged, tagged with an AF Form 982, and controlled by the supervisor or operator.

21.6.1.3. All energy isolating devices that are needed to control the energy to the machine or equipment shall be utilized.

21.6.1.3.1. The initial lockout or tagout devices shall be attached to each energy isolating device by the authorized personnel. Any additional qualified personnel who perform maintenance on the machine or equipment may apply their lock during the performance of their maintenance activity.

21.6.1.3.2. Lockout or tagout devices, where used, shall be attached in a manner that will hold the energy isolating devices in a “safe” or “off” position.

21.6.1.3.3. Tagout devices, AF Forms 979 or 982, used with energy isolating devices designed with the capability of being locked shall be attached at the same point as the lock. In these cases where energy isolating devices cannot be locked because of design, tagout devices shall be attached. The tag will be secured with a self-locking and non-releasable attachment that has a minimum unlocking strength of no less than 50 pounds, for example, a nylon or plastic cable tie-off strap. These devices shall be attached in such a manner as to interfere with the operation of energy isolating devices.

21.6.1.3.4. Where a tag cannot be attached directly to the energy isolating device, the tag shall be located as close as safely possible to the device in a position that will be immediately obvious to anyone attempting to operate the device. **NOTE:** Whenever major replacement, repair, renovation, or modification of machines or equipment is performed, and whenever new

machines or equipment are installed, energy isolating devices for such machines or equipment shall be designed to accept a lockout device.

21.6.1.4. Once the system is locked or tagged out, all potentially hazardous stored or residual energy shall be relieved, disconnected, or restrained.

21.6.1.5. Prior to starting work on machinery or equipment that has been locked out or tagged out, the authorized employee shall verify that the machine or equipment has been deenergized or isolated. If there is a possibility of reaccumulation of stored energy to a hazardous level, verification of isolation shall be continued until the servicing or maintenance is completed, or until the possibility of such accumulation no longer exists.

21.6.1.6. Before restoring machines and equipment to service, the supervisor or authorized employee will:

21.6.1.6.1. Ensure all personnel, tools, and maintenance or servicing equipment have been removed and guards have been reinstalled.

21.6.1.6.2. Notify personnel the locks or tags have been removed and equipment is in service.

21.6.1.6.3. Remove all locks or tags and restore the energy isolating device to the 'ON' position.

21.6.1.7. Whenever it becomes necessary to remove lockout or tagout devices to temporarily start up machines or equipment for testing or component repositioning, restoration procedures shall be performed according to instructions in paragraphs **21.6.1.** or **21.7.2.4.** Immediately upon completion of the testing or repositioning procedures, the affected machines or equipment shall be locked or tagged out according to instructions in paragraphs **21.6.1.** or **21.7.2.4.**

21.6.1.8. Specific procedures shall be utilized during shift or personnel changes to ensure the continuity of lockout or tagout protection. This includes a provision for the orderly transfer of these devices between off-going and on-coming supervisors, to minimize exposure to hazards from the unexpected energization, start-up, or release of stored energy from machines or equipment. On-coming supervisors shall be required to "lock-on" before the off-going supervisor will "lock-off." Where the machine or equipment is out of service for an extended period of time, there is no requirement to transfer the locks and tags during each shift change.

21.6.2. Training:

21.6.2.1. Training shall be provided to ensure the purpose and function of the lockout and tagout programs are understood by the authorized employee, and qualified equipment maintenance personnel and that the knowledge and skills required for safe usage of lockout and tagout procedures in paragraph **21.6.1.** are understood. The training shall include the following:

21.6.2.1.1. Each authorized personnel or any qualified equipment maintenance person shall receive initial job training on the type and magnitude of applicable energy sources, the methods and means necessary for energy isolation and control, and the use of the lockout and tagout procedures.

21.6.2.1.2. All other personnel whose duties are or may be in an area where lockout and tagout procedures may be utilized, shall be briefed on the program during the initial job safety briefing.

21.6.2.2. When lockout or tagout procedures are used, the authorized personnel or any qualified equipment maintenance personnel shall also receive initial job training on the following use of locks and tags:

21.6.2.2.1. Tags are essentially warning devices attached to energy isolating devices, and do not provide the physical restraint on those devices that is provided by a lock.

21.6.2.2.2. When a lock or tag is attached to an energy isolating device, only supervisor and the authorized personnel who initially installed the lock or tag can remove it, and it can never be bypassed, ignored, or otherwise defeated.

21.6.2.2.3. Tags may cause a false sense of security, and their use and limitations need to be understood as part of the overall energy control program.

21.6.2.2.4. Tags will be securely attached so they cannot be inadvertently or accidentally detached during use.

21.6.2.3. Retraining shall be provided for the authorized employee, supervisors, and qualified equipment maintenance personnel at least annually or whenever there is a change in their job assignments, a change in machines or equipment, processes that present a new hazard, or when there is a change in the lockout or tagout procedures. Additional retraining shall also be conducted whenever a periodic inspection reveals there are deviations from, or inadequacies in, the supervisor, operator, or qualified equipment maintenance personnel's knowledge or use of the lockout or tagout procedures.

21.6.2.4. All training shall be certified and documented and kept up-to-date. The certification shall contain each individual's name and dates of training. This training shall be documented IAW AFI 91-301. When units use a computerized information management system, the training may be documented in the training subsystem.

21.6.3. Inspections:

21.6.3.1. Periodic inspections of the lockout and tagout programs shall be conducted at least annually by a qualified ground safety inspector to ensure compliance. The inspection shall include as a minimum, the program's procedures and training and self-inspection requirements.

21.6.3.2. Periodic self-inspection shall be conducted by the unit to ensure compliance with all program elements. The self-inspection shall include as a minimum, the identification of the machines and equipment on which the lockout and tagout program is used, a review of each person's responsibilities under the program, and that all necessary training has been conducted and documented. The self-inspection shall be documented to include the date of the inspection and the unit representative conducting the self-inspection.

21.6.3.3. Recommended Criteria and Proportions for Locally Manufactured Signs. Whenever possible, commercially manufactured signs should be procured. When it is necessary to locally manufacture signs, the criteria and proportions in **Table 21.1.** through **Table 21.6.** are suggested or recommended.

21.7. Sample Lockout or Tagout Procedures (Figure 21.1.):

21.7.1. General. Lockout is the preferred method of isolating machines or equipment from energy sources. To assist organizations in developing a procedure which meets the requirements of the stan-

dard, however, the following simple procedure is provided for use in both lockout and tagout programs. This procedure may be used when there are limited numbers or types of machines or equipment or there is a single power source. For more complex systems, a more comprehensive procedure will be developed, documented, and utilized.

21.7.2. Lockout or Tagout Procedure for Your Organization:

21.7.2.1. Purpose. This procedure establishes the minimum requirements for the lockout or tagout of energy isolating devices. It shall be used to ensure the machine or equipment is isolated from all potentially hazardous energy, and locked out or tagged out before qualified personnel perform any servicing or maintenance activities where the unexpected energization, start-up, or release of stored energy could cause injury.

21.7.2.2. Responsibility. Personnel shall be instructed in the safety significance of the lockout (or tagout) procedure by (Names or Job Titles of certified individuals authorized to lockout or tagout). Each new or transferred individual and other personnel whose work operations are or may be in the area shall be instructed in the purpose and use of the lockout and tagout procedures during initial job safety briefing.

21.7.2.3. Preparation for Lockout or Tagout. A survey to locate and identify all machines and equipment requiring lockout or tagout procedures will be made. All isolating devices shall be located and identified to be certain which switches, valves, or other energy isolating devices apply to the machines and equipment to be locked or tagged out. More than one energy source (electrical, mechanical, or others) may be involved. (List types and locations of energy isolating device for each machine or equipment). **NOTE:** Machines or other equipment, using a simple wall plug as the power source, are not included as long as the plug is controlled by the supervisor or operator.

21.7.2.4. Sequence of Lockout or Tagout System Procedure:

21.7.2.4.1. Notify all personnel that a lockout or tagout system is going to be utilized and the reason. Ensure the individual knows the type and magnitude of energy that the machine or equipment utilizes and understands the hazards it presents.

21.7.2.4.2. If the machine or equipment is operating, shut it down by the normal stopping procedure (depress stop button, open toggle switch, etc.).

21.7.2.4.3. Operate the switch, valve, or other energy isolating devices so the equipment is isolated from its energy sources. Dissipate or restrain stored energy (such as that in springs, elevated machine members, rotating flywheels, hydraulic systems, and air, gas, steam, or water pressure, etc.) by methods such as repositioning, blocking, bleeding down, etc. (List the types of stored energy and methods used to dissipate or restrain.)

21.7.2.4.4. Lockout or tagout the energy isolating devices with assigned individual locks or tags (methods selected; i.e., locks, tags, additional safety measures, etc.).

21.7.2.4.5. After ensuring that no personnel are exposed, and as a check on having disconnected the energy sources, operate the push button or other normal operating controls to make certain the equipment will not operate (types of equipment checked to ensure disconnection). CAUTION: Return operating controls to “neutral” or “off” position after the test.

21.7.2.4.6. The equipment is now locked out or tagged out.

21.7.2.5. Restoring Machines or Equipment to Normal Production Operations:

21.7.2.5.1. After the servicing or maintenance is complete and equipment is ready for normal production operations, check the area around the machines or equipment to ensure no one is exposed.

21.7.2.5.2. After all tools have been removed from the machine or equipment, guards have been reinstalled, and personnel are in the clear, remove all lockout or tagout devices. Notify personnel that the locks or tags have been removed and the equipment is in service. Operate the energy isolating devices to restore energy to the machine or equipment.

21.7.2.6. Procedure Involving More Than One Person. In the preceding steps, if more than one individual is required to lockout or tagout equipment, each shall place his or her own personal lockout device or tagout device on the energy isolating devices. When an energy isolating device cannot accept multiple locks or tags, a multiple lockout or tagout device (hasp) may be used.

21.7.2.7. Basic Rules for Using Lockout or Tagout System Procedures. All equipment shall be locked out or tagged out to protect against accidental or inadvertent operation when such operation could cause injury to personnel. Personnel will not attempt to operate any switch, valve, or other energy isolating device when it is locked or tagged out.

21.8. Examples of Color Applications. The safety color code in **Figure 21.6.** will be used to alert and inform persons to take precautionary action or other appropriate action in the presence of a hazard (per requirements in paragraph **21.4.2.**).
Table 21.6.

21.9. Examples of Wording for Mishap Prevention Signs. The color of a sign indicates the degree of the hazard (such as red for immediate danger) and the message of the sign must convey an easily understood message. See **Table 21.7.**

Figure 21.1. Danger Sign.

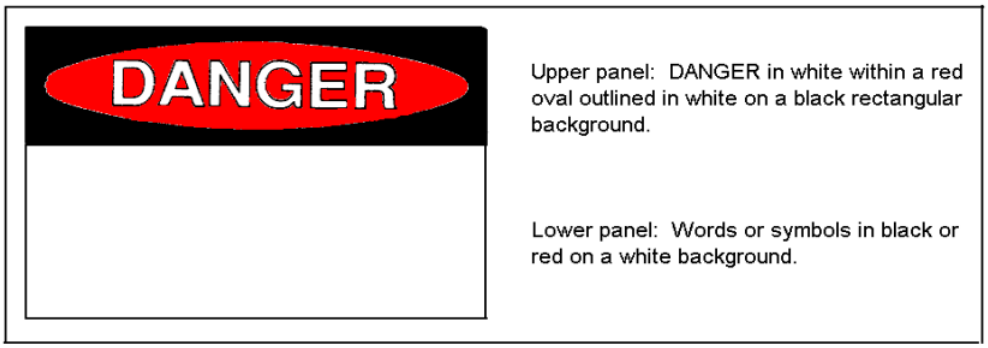

Figure 21.2. Caution Sign.

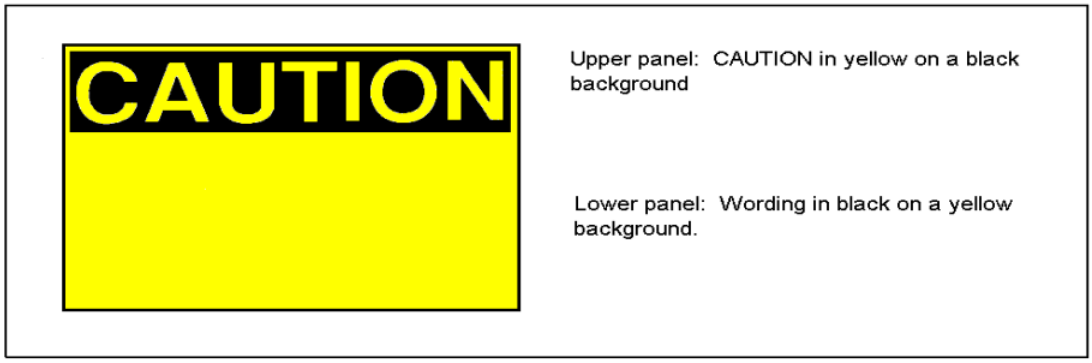

Figure 21.3. Directional Signs.

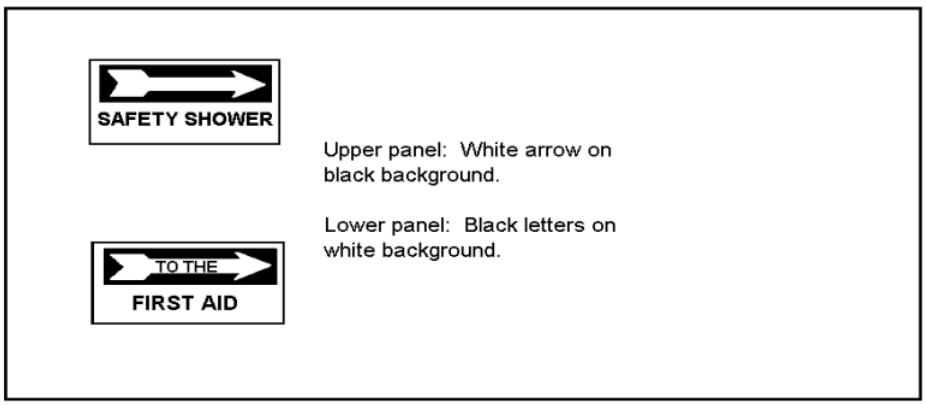

Figure 21.4. Instruction and Identification Signs.

Figure 21.5. Standard Biological Hazard Symbol.

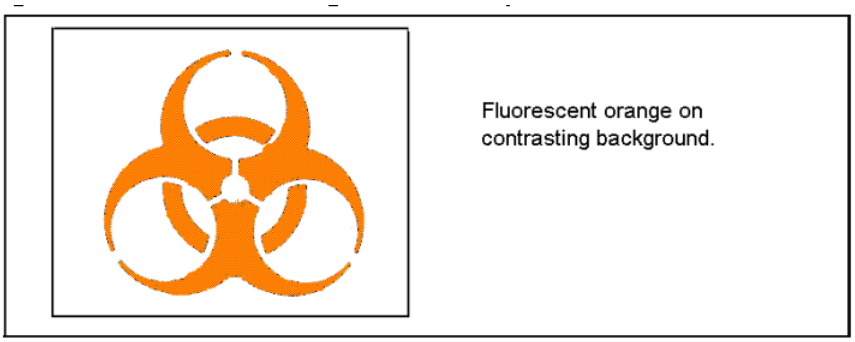

Figure 21.6. AF Form 979, Danger Tag.

Figure 21.7. AF Form 980, Caution Tag.

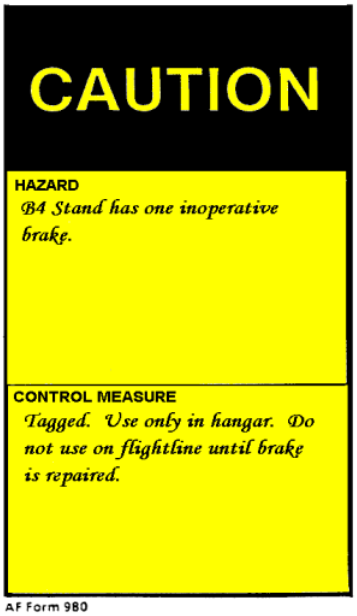

Figure 21.8. AF Form 981, Out of Order Tag.

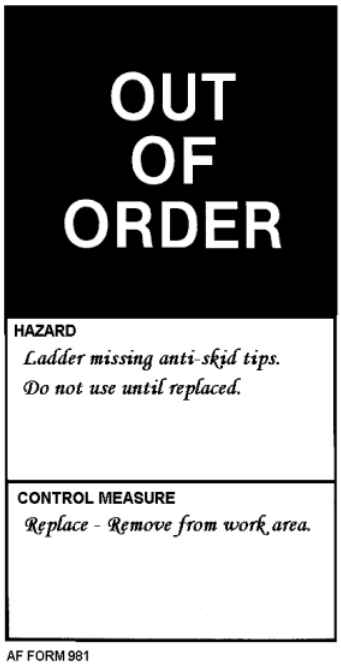

Figure 21.9. AF Form 982, Do Not Start Tag.

Figure 21.10. Reverse Side of AF Forms 979 and 982.

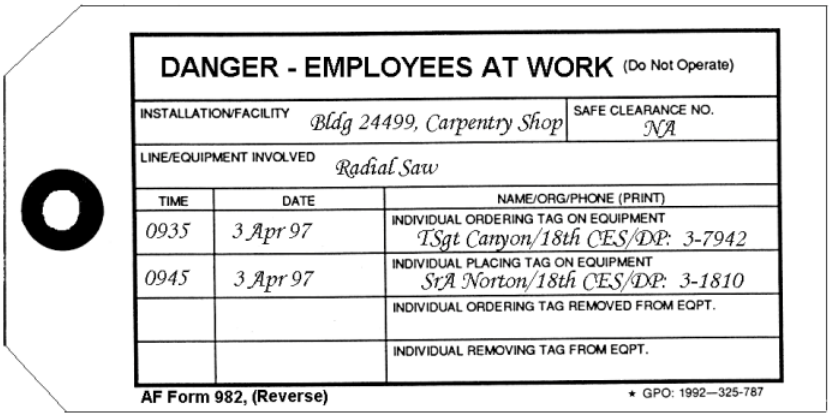

DANGER - EMPLOYEES AT WORK (Do Not Operate)

INSTALLATION/FACILITY *Bldg 24499, Carpentry Shop*	SAFE CLEARANCE NO. *NA*
LINE/EQUIPMENT INVOLVED *Radial Saw*	

TIME	DATE	NAME/ORG/PHONE (PRINT)
0935	*3 Apr 97*	INDIVIDUAL ORDERING TAG ON EQUIPMENT *TSgt Canyon/18th CES/DP: 3-7942*
0945	*3 Apr 97*	INDIVIDUAL PLACING TAG ON EQUIPMENT *SrA Norton/18th CES/DP: 3-1810*
		INDIVIDUAL ORDERING TAG REMOVED FROM EQPT.
		INDIVIDUAL REMOVING TAG FROM EQPT.

AF Form 982, (Reverse) ★ GPO: 1992—325-787

Figure 21.11. Reverse Side of AF Form 980.

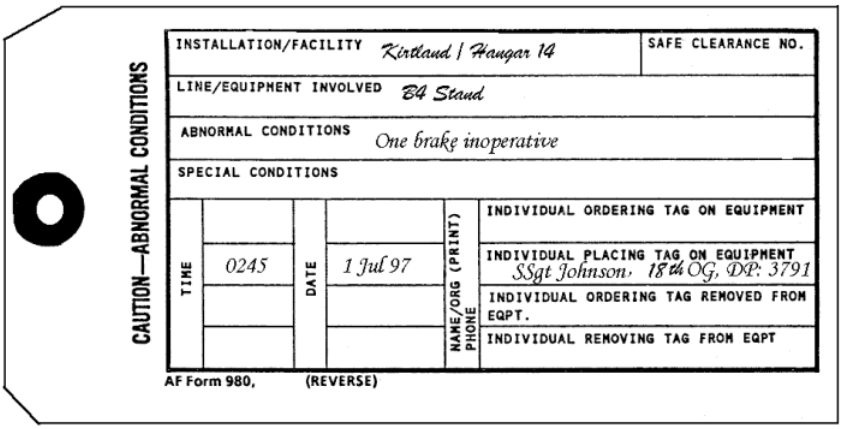

CAUTION—ABNORMAL CONDITIONS

INSTALLATION/FACILITY *Kirtland / Hangar 14*	SAFE CLEARANCE NO.
LINE/EQUIPMENT INVOLVED *B4 Stand*	
ABNORMAL CONDITIONS *One brake inoperative*	
SPECIAL CONDITIONS	

TIME	DATE	NAME/ORG (PRINT) PHONE	
			INDIVIDUAL ORDERING TAG ON EQUIPMENT
0245	*1 Jul 97*		INDIVIDUAL PLACING TAG ON EQUIPMENT *SSgt Johnson, 18th OG, DP: 3791*
			INDIVIDUAL ORDERING TAG REMOVED FROM EQPT.
			INDIVIDUAL REMOVING TAG FROM EQPT

AF Form 980, (REVERSE)

Figure 21.12. Reverse Side of AF Form 981.

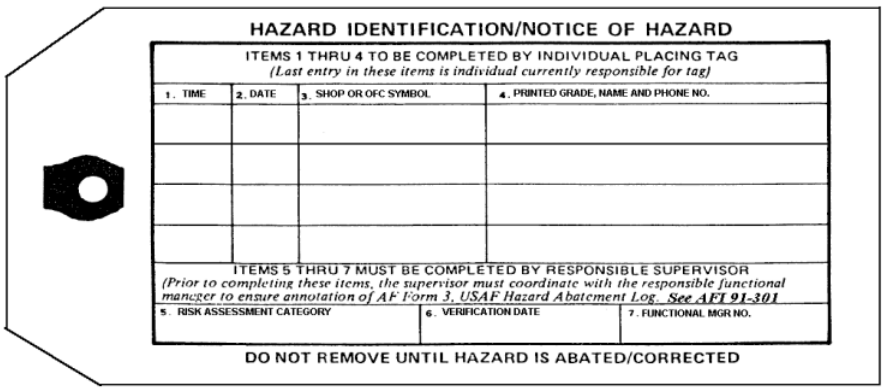

HAZARD IDENTIFICATION/NOTICE OF HAZARD

ITEMS 1 THRU 4 TO BE COMPLETED BY INDIVIDUAL PLACING TAG
(Last entry in these items is individual currently responsible for tag)

1. TIME	2. DATE	3. SHOP OR OFC SYMBOL	4. PRINTED GRADE, NAME AND PHONE NO.

ITEMS 5 THRU 7 MUST BE COMPLETED BY RESPONSIBLE SUPERVISOR
(Prior to completing these items, the supervisor must coordinate with the responsible functional manager to ensure annotation of AF Form 3, USAF Hazard Abatement Log. ***See AFI 91-301***

5. RISK ASSESSMENT CATEGORY	6. VERIFICATION DATE	7. FUNCTIONAL MGR NO.

DO NOT REMOVE UNTIL HAZARD IS ABATED/CORRECTED

Table 21.1. Standard Criteria & Proportions For Locally Manufactured Signs (Letter Size Versus Legibility Distance).

Height of Letters (Inches)	Distance Visible (Feet)	Height of Letters (Inches)	Distance Visible (Feet)
3 1/2	105	1	33
3	90	7/8	28
2 1/2	75	3/4	23
2	60	5/8	18
1 3/4	52	1/2	15
1 1/2	45	3/8	12
1 1/4	40	1/4	10

NOTE: Whenever possible, commercially manufactured signs should be procured. When it is necessary to locally manufacture signs, the following criteria and proportions are suggested or recommended.
The above letter size versus legibility distance values assume at least 20/40 visual acuity or the viewer and adequate lighting of the sign and do not include any allowance for various color combinations.

Table 21.2. Standard Proportions for Danger Signs.

Sign Size, Inches Height Width	Black Rectangular Panel, Inches Height/Width	Red Oval, Inches Height/Width	Wording **DANGER,** Inches/Height	Minimum Space Available for Sign Wording, Inches
Horizontal Pattern				
7 x 10	3 ¼ x 9 $^{3}/_{8}$	2 $^{7}/_{8}$x 8 ½	1 $^{7}/_{16}$	2 ¾ x 9 $^{3}/_{8}$
10 x 14	4 $^{5}/_{8}$x 13 $^{3}/_{8}$	4 $^{1}/_{8}$x 11 $^{7}/_{8}$	2 $^{1}/_{16}$	4 ¼ x 13 $^{3}/_{8}$
14 x 20	6 ½ x 19 $^{3}/_{8}$	5 ¾ x 17	2 $^{7}/_{8}$	6 ¼ x 19 $^{3}/_{8}$
20 x 24	9 ¼ x 27 $^{3}/_{8}$	8 ¼ x 23 $^{7}/_{8}$	4 $^{1}/_{8}$	9 ½ x 27 $^{3}/_{8}$
Upright Pattern				
10 x 7	2 $^{3}/_{8}$ x 6 $^{3}/_{8}$	2 $^{1}/_{8}$ x 5 $^{7}/_{8}$	1 $^{1}/_{16}$	6 $^{3}/_{8}$ x 6 $^{3}/_{8}$
14 x 10	3 ¼ x 9 $^{3}/_{8}$	2 $^{7}/_{8}$ x 8 ½	1 $^{7}/_{16}$	9 ½ x 9 $^{3}/_{8}$
20 x 14	4 $^{5}/_{8}$ x 13 $^{3}/_{8}$	4 $^{1}/_{8}$ x 11 $^{7}/_{8}$	2 $^{1}/_{16}$	14 x 13 $^{3}/_{8}$
28 x 20	6 ½ x 19 $^{3}/_{8}$	5 ¾ x 17	2 $^{7}/_{8}$	20 ¼ x 19 $^{3}/_{8}$

Table 21.3. Standard Proportions for Cautions Signs.

Sign Size, Inches Height Width	Black Rectangular Panels, Inches/Height/ Width	Wording CAUTION, Inches/Height	Maximum Space Available For Sign Wording, Below Panel; Inches/Height/Width
Horizontal Pattern			
7 x10	2 ¼ x 9 $^{3}/_{8}$	1 $^{5}/_{8}$	3 ¼ x 9 $^{3}/_{8}$
10 x 14	3 ¼ x 13 $^{3}/_{8}$	2 ¼	5 ½ x 13 $^{3}/_{8}$
14 x 20	3 ¾ x 19 $^{3}/_{8}$	2 ¾	9 x 19 $^{3}/_{8}$
20 x 28	4 ¼ x 27 $^{3}/_{8}$	3 ¼	14 ½ x 27 $^{3}/_{8}$
Upright Pattern			
10 x 7	1 5/8 x 6 $^{3}/_{8}$	1 $^{1}/_{8}$	7 x 6 $^{3}/_{8}$
14 x 10	2 ¼ x 9 $^{3}/_{8}$	1 $^{5}/_{8}$	10 ½ x 9 $^{3}/_{8}$
20 x 14	3 ¼ x 13 $^{3}/_{8}$	2 ¼	15 ½ x 13 $^{3}/_{8}$
28 x 20	3 ¾ x 19 $^{3}/_{8}$	2 ¾	24 x 19 ¾

Table 21.4. Standard Proportions for Instruction and Identification Signs.

Sign Size, Inches/ Height/Width	Height of Letters, Inches For One Line	Height of Letters, Inches For Two Lines	Height of Letters, Inches For Three Lines	Maximum Space Available for Sign Wording, Inches/ Weight/Width
Horizontal				
7 x 10	3	1 ½	1 ½	6 x 9
10 x 14	6	2 ½	2	9 x 13
9 x 20	3	2 ½	1 ½	8 x 19
14 x 20	N/A	3	3	13 x 19

Table 21.5. Standard Proportions for Directional Signs.

Sign Size, Inches, Height, Width	Black Rectangular Panel, Inches, Height, Width	Overall Length	Arrow Head Height, Width	Arrow Shaft Height	White Arrow, Arrow Tail, Height, Width	Maximum Space Available for Inches Sign Wording Below Panel, Inches, Height, Width
6 ½ x 14	3 ¼ x 13 $^{3}/_{8}$	12 $^{5}/_{8}$	2 ¾ x 3	1 $^{1}/_{8}$	2 $^{3}/_{8}$x 3 ¼	2 ¼ x 13 ¾
9 x 20	4 ½ x 19 $^{3}/_{8}$	18 $^{5}/_{8}$	3 ¾ x 4 $^{1}/_{8}$	1 $^{5}/_{8}$	3 ¼ x 4 ½	3 $^{3}/_{8}$x 19 $^{3}/_{8}$
12 x 28	6 x 27 $^{3}/_{8}$	26 $^{7}/_{8}$	5 $^{1}/_{8}$x 5 $^{5}/_{8}$	2 $^{1}/_{8}$	4 $^{3}/_{8}$x 6	4 ¾ x 27 $^{3}/_{8}$
15 x 36	7 ½ x 35 $^{3}/_{8}$	34 $^{5}/_{8}$	6 $^{3}/_{8}$x 6 $^{7}/_{8}$	2 $^{5}/_{8}$	5 ½ x 7 ½	6 ¼ x 35 $^{3}/_{8}$

Table 21.6. Examples of Color Applications.

Black and White		
Dead-ends of aisles	Location of aisle ways	Direction Signs
Location of refuse cans	Lettering on piping systems and compressed gas cylinders	Piping systems containing raw or potable water
Orange		
Inside of movable guards (solid panel)	Lower traveling blocks on cranes and hoists	Exposed edge of pulley, gears, rollers, cutting devices, power jaws, etc.
Green		
Location of health station	Location of personal protective equipment	Location of emergency showers
Safety bulletin board	Piping system containing oxidizing materials	Compressed gas cylinders containing oxidizing materials
Magenta		
Radioactive filter housings	Radiation ion exchanger	Radioactive waste containers
Radioactive sampling connections	Radiation signs	Lettering on piping systems containing radioactive substances
Red		
Danger Signs	Stop Signs	Stop Buttons and Bars equipment

Yellow		
Corner markers for storage piles	Coverings or guard for guide wires	Fixtures extending into operating area
Guardrails on top and bottom	Horizontal lips of vertically sliding, counterbalanced elevator doors	Pillars or posts which might be struck
Cautions signs	Piping system containing radioactive substance	Flammable liquid container
Piping systems containing flammable materials	Compressed gas containing flammable materials	

Table 21.7. Examples of Wording For Mishap Prevention Signs.

Caution	Danger
Close Clearance	Acid
Electrical Fence	Ammonia
Electrical Trucks, Go Slow	Crane Overhead
Eye Protection Required	Cyanide
Goggles Must Be Worn When Operating This Machine	Do Not Energize Switch, Personnel Working on Line
Hearing Protection Required	Do Not Operate, Personnel Working on Equipment
Keep Aisles Clear	Energized Equipment
Keep Door Closed	Explosives—Keep Out
Keep This Space Clear at All Times	Explosives Magazine
Operators of This Machine Will Wear Snug-Fitting Clothing – No Gloves	Explosives –Turn Off Two-Way Radios
	Keep Away
Respirator Required in This Area	Keep Off, Electric Current
Safety Fuse, Burning Rate 40 Feet Per Second, Plus or Minus 10 Percent	Employees in Boiler
Step down	Employees on Cars
Stop Machinery to Clean, Oil, or Repair	Employees Working Above
Use Ladder Climbing Safety Devices	Employees Working on Machines, Do Not Start
Watch Your Step	Not Room Enough to Clear
Do Not Enter Room When Alarm Sounds Halon 1301 (or CO2) Being Discharged	No Smoking, Matches, or Open Flames

When Alarm Sounds, Vacate Room Halon 1301 (CO2) Being Discharged	Test in Progress
Directional	**Instructional and Identification**
Fire (inside arrow) Extinguisher (below arrow panel)	Compressed Breathing Air Station
Walkway (below arrow panel)	Do Not Eat or Drink in This Area
This Way to (inside arrow) First-Aid Room (below arrow panel)	Emergency Shower
This Way Out (below arrow panel	Eyewash Fountain
This Way (inside arrow) Out (below arrow panel)	Make Your workplace Safe Before Starting the Job
To (inside arrow) First Aid (below arrow panel)	Report All injuries No Matter How Slight
	Report All Unsafe Conditions to Your Supervisor
	Respirator
	Wash Hands Before Eating

Figure 21.13. SAMPLE LOCKOUT OR TAGOUT PROCEDURES

F21.1. General. Lockout is the preferred method of isolating machines or equipment from energy sources. To assist organizations in developing a procedure which meets the requirements of the standard, however, the following simple procedure is provided for use in both lockout and tagout programs. This procedure may be used when there are limited numbers or types of machines or equipment or there is a single power source. For more complex systems, a more comprehensive procedure will be developed, documented, and utilized.

F21.2. Lockout or Tagout Procedure for Your Organization:

F21.2.1 Purpose. This procedure establishes the minimum requirements for the lockout or tagout of energy isolating devices. It shall be used to ensure the machine or equipment is isolated from all potentially hazardous energy, and locked out or tagged out before qualified personnel perform any servicing or maintenance activities where the unexpected energization, start-up, or release of stored energy could cause injury.

F21.2.2. Responsibility. Personnel shall be instructed in the safety significance of the lockout (or tagout) procedure by (Names or Job Titles of certified individuals authorized to lockout or tagout). Each new or transferred individual and other personnel whose work operations are or may be in the area shall be instructed in the purpose and use of the lockout and tagout procedures during initial job safety briefing.

F21.2.3. Preparation for Lockout or tagout. A survey to locate and identify all machines and equipment requiring lockout or tagout procedures will be made. All isolating devices shall be located and identified to be certain which switches, valves, or other energy isolating devices apply to the machines and equipment to be locked or tagged out. More than one energy source (electrical, mechanical, or others) may be involved. (List types and locations of energy isolating device for each machine or equipment). **NOTE:** Machines or other equipment, using a simple wall plug as the power source, are not included as long as the plug is controlled by the supervisor or operator.

F21.2.4. Sequence of Lockout or Tagout System Procedure:

F21.2.4.1. Notify all personnel that a lockout or tagout system is going to be utilized and the reason. Ensure the individual knows the type and magnitude of energy that the machine or equipment utilizes and understands the hazards it presents.

F21.2.4.2. If the machine or equipment is operating, shut it down by the normal stopping procedure (depress stop button, open toggle switch, etc.).

F21.2.4.3. Operate the switch, valve, or other energy isolating devices so the equipment is isolated from its energy sources. Dissipate or restrain stored energy (such as that in springs, elevated machine members, rotating flywheels, hydraulic systems, and air, gas, steam, or water pressure, etc.) by methods such as

repositioning, blocking, bleeding down, etc. (List the types of stored energy and methods used to dissipate or restrain.)

F21.2.4.4. Lockout or tagout the energy isolating devices with assigned individual locks or tags (methods selected; i.e., locks, tags, additional safety measures, etc.).

F21.2.4.5. After ensuring that no personnel are exposed, and as a check on having disconnected the energy sources, operate the push button or other normal operating controls to make certain the equipment will not operate (types of equipment checked to ensure disconnection). CAUTION: Return operating controls to “neutral” or “off” position after the test.

F21.2.4.6. The equipment is now locked out or tagged out.

F21.2.5. Restoring Machines or Equipment to Normal Production Operations:

F21.2.5.1. After the servicing or maintenance is complete and equipment is ready for normal production operations, check the area around the machines or equipment to ensure no one is exposed.

F21.2.5.2. After all tools have been removed from the machine or equipment, guards have been reinstalled, and personnel are in the clear, remove all lockout or tagout devices. Notify personnel that the locks or tags have been removed and the equipment is in service. Operate the energy isolating devices to restore energy to the machine or equipment.

F21.2.6. Procedure Involving More Than One Person. In the preceding steps, if more than one individual is required to lockout or tagout equipment, each shall place his or her own personal lockout device or tagout device on the energy isolating devices. When an energy isolating device cannot accept multiple locks or tags, a multiple lockout or tagout device (hasp) may be used.

F21.2.7. Basic Rules for Using Lockout or Tagout System Procedures. All equipment shall be locked out or tagged out to protect against accidental or inadvertent operation when such operation could cause injury to personnel. Personnel will not attempt to operate any switch, valve, or other energy isolating device when it is locked or tagged out.

Figure 21.14. Hazardous Energy Control and Mishap Prevention Signs and Tags Checklist.

This is not an all inclusive checklist. It, like all the checklists in this standard, simply highlights some critical items in the corresponding chapters. Other requirements exist that are not included in the checklist. Where appropriate, MAJCOMs, FOAs DRUs, local safety staffs, and supervisors will add to this checklist to include command or individual location or shop-unique requirements or situations.

F21.3. Are safety, health, and fire prevention signs used effectively for worker awareness and education in industrial, shop, and other work areas to convey a clear, concise message to prevent mishaps? (Reference **21.1.2.**)

F21.4. Are safety, health, or fire prevention tags used only as a temporary warning prior to safeguarding or correcting the hazard? (Reference **21.2.**)

F21.5. Are locks used as a positive means of isolating energy sources and preventing the unexpected start-up of machines and equipment? (Reference **21.3.3.**)

F21.6. Are procedures developed and documented for the safe and proper use of locks and tags? (Reference **21.3.4.**)

F21.7. Has a training plan been developed to provide initial and recurring training on lockout and tagout procedures? (Reference **21.3.5.**)

F21.8. Is a periodic inspection of the lockout and tagout program conducted at least annually? (Reference **21.3.6.**)

F21.9. Is an adequate supply of safety tags and locks available for use? (Reference **21.3.9.**)

F21.10. Do danger, caution, and safety information signs meet color and size criteria? (Reference **21.4.1.** – **21.4.2.**)

F21.11. Does the wording (or graphics) clearly convey the mishap prevention messages? (Reference **21.4.1.**& **21.4.1.3.**)

F21.12. Are Risk Assessment Codes (RAC) and verification dates assigned by safety, fire, or health, as appropriate, to ensure hazards requiring more than 30 days to correct are entered into hazard abatement system and that the back of tags are annotated? (Reference 91-301)

F21.13. Are AF Forms 979, **Danger Tag**, used only to identify immediate danger situations with risk assessment codes 1 through 3? (Reference **21.5.2.2.**)

F21.14. Are AF Forms 980, **Caution Tag**, used to identify or warn of potential hazards? (Reference **21.5.2.3.**)

F21.15. Are AF Forms 981, **Out of Order Tag**, used to warn of a hazard if the equipment, machinery, tool, utility, or system is used? **NOTE:** May be tagged with unserviceable or repairable tag if prescribed by TO. (Reference **21.5.2.4.**)

F21.16. Are AF Forms 982, **Do Not Start Tag**, used to warn personnel of a potential hazard if equipment is restarted? (Reference **21.5.2.5.1.**)

F21.17. Is notification given to personnel in the area before and after lockout or tagout controls are used? (Reference **21.6.1.**)

F21.18. Does the supervisor or operator responsible for a machine or equipment have knowledge of the type and magnitude of the energy source and the methods and means to control the source? (Reference **21.6.1.1.**)

F21.19. Are lockout or tagout devices attached in a manner that will hold the energy isolating devices in a “safe” or “off” position? (Reference **21.6.1.3.2.**)

F21.20. Are specific procedures utilized during shift or personnel changes to ensure the continuity of lockout or tagout protection? (Reference **21.6.1.8.**)

F21.21. Is initial and recurring job training on the lockout and tagout program conducted, documented, and kept up-to-date? (Reference **21.6.2.1.** – **21.6.2.3.**

F21.22. Are periodic self-inspections conducted and documented by the unit? (Reference **21.6.3.2.**)

Chapter 22

FLAMMABLES AND COMBUSTIBLES

22.1. General Information. This chapter addresses key flammable and combustible liquids criteria, references other Air Force directives that cover specific aspects of flammable and combustible liquids storage, use, and handling, and implements pertinent portions of regulatory Occupational Safety and Health Administration (OSHA) Standard Title 29 Code of Federal Regulations (CFR) 1910.106, *Flammable and Combustible Liquids*. It includes the storage (inside/outside), use, and handling of flammable and combustible liquids in containers or tanks of 60 gallons or less and in portable tanks up to 660 gallons capacity. It also includes storage in fuel tanks of 2 gallons or less located on small gasoline-powered equipment such as lawnmowers and snow-blowers. It does not apply to petroleum products in fuel tanks of motor vehicles, aircraft, boats, other watercraft, large portable or stationary engines, petroleum products in portable tanks over 660 gallons, alcoholic beverages when packed in individual glasses, plastic, metal or ceramic containers not exceeding 4 liters in volume, medicines, foodstuffs and cosmetics, special purpose vehicles designed and maintained for the storage and transportation of flammable or combustible liquids, or liquids having no flashpoint which may not burn under normal conditions.

22.1.1. Hazards. Personnel working or handling flammable and combustible liquids may be exposed to spills of liquids, hazardous vapors, accidental mixture of flammable and combustibles, or industrial hazards associated with the handling of containers and products. Physical hazards from flammable and combustible materials include fires and explosions. Preventing fires and explosions caused by static electricity or unauthorized defective electrical equipment requires increased attention during the handling and storage of flammable and combustible liquids.

22.1.1.1. Flammable Liquids. A liquid with a closed cup flashpoint below 100 degrees Fahrenheit (F) (37.8 degrees Celsius [C]) and having a vapor pressure not exceeding 40 pounds per square inch, gauge (psig) (2068 millimeters [mm] mercury [Hg]) at 100 degrees F (37.8 degrees C). Flammable liquids are categorized as Class I liquids, and are further subdivided as follows: (National Fire Protection Association [NFPA] 30, Flammable and Combustible Liquids Code.) **NOTE:** There are few chemicals with a flashpoint outside of these limits (such as anhydrous ammonia) that are still considered flammable liquids.

22.1.1.2. Class IA are those that have a flashpoint below 73 degrees F (22.8 degrees C) and have a boiling point below 100 degrees F (37.8 degrees C). (NFPA 30.)

22.1.1.3. Class IB are those that have a flashpoint below 73 degrees F (22.8 degrees C) and have a boiling point at or above 100 degrees F (37.8 degrees C). (NFPA 30.)

22.1.1.4. Class IC are those that have a flashpoint at or above 73 degrees F (22.8 degrees C) and below 100 degrees F (37.8 degrees C). (NFPA 30)

22.1.2. Combustible Liquid. A liquid having a closed cup flashpoint at or above 100 degrees F (37.8 degrees C). Combustible liquids are categorized as Class II or Class III liquids and they are further subdivided as follows): (NFPA 30.)

22.1.2.1. Class II liquids are those having a flashpoint at or above 100 degrees F (37.8 degrees C) and below 140 degrees F (60 degrees C). (NFPA 30.)

22.1.2.2. Class IIIA liquids are those having flashpoint at or above 140 degrees F (60 degrees C) and below 200 degrees F (93.35 degrees C), except any mixture having components with flashpoints of 200.5 degrees F (93 degrees C). (29 CFR 1910.106)

22.1.2.3. Class IIIB liquids are those having flashpoints at or above 200 degrees F (93 degrees C). **NOTE:** This standard does not cover Class IIIB liquids. Where the term Class III liquids is used in this standard, it shall mean only Class IIIA liquids. (29 CFR 1910.106)

22.2. Human Factors. Human factors fall into two major categories:

22.2.1. Attitude, emotion, job or domestic pressure, distractions, job knowledge, and hurrying; or

22.2.2. Physical, such as fatigue, physical strength, and reactions to prescriptions, medications, or drugs. These factors may affect workers who, by their commission (what they do) or by their omission (what they fail to do), can contribute to or even be the cause of a mishap. Some examples are:

22.2.2.1. Ignoring directions from supervisors and work leaders.

22.2.2.2. Use of personal protective equipment (PPE) or tools while angry or distracted.

22.2.2.3. Performing a task while thinking about personal problems.

22.2.2.4. Not following established procedures or taking unauthorized shortcuts to save time.

22.2.2.5. Performing job tasks while taking prescribed medications that cause drowsiness.

22.2.2.6. Performing job tasks while under the influence of alcohol or illegal drugs.

22.2.2.7. Using equipment when not properly trained or qualified.

22.2.2.8. Being unaware of the hazardous properties of flammable and combustibles and their control. (29 CFR 1910.1200, Hazard Communication).

22.3. Responsibilities:

22.3.1. Functional Managers and (or) Supervisors. Shall:

22.3.1.1. Provide all workers and handlers of flammable or combustibles with the appropriate level of training associated with tasks and associated hazards related to the work environment.

22.3.1.2. Ensure personnel engaged in activities that involve the handling or use of hazardous materials receive training per requirements in AFOSH Standard 161-21, *Hazard Communication*.

22.3.1.3. Ensure individuals involved in dispensing of flammable or combustible liquids are instructed on the hazards of static electricity.

22.3.1.4. Make sure personnel handling and storing flammable or combustible liquids are trained in fire prevention and protection as it relates to their particular duties.

22.3.1.5. Ensure appropriate spill and containment control materials are readily available at storage or dispensing areas.

22.3.1.6. Ensure PPE is available and appropriately worn when handling flammable or combustible liquids.

22.4. General Requirements:

22.4.1. General Information. Flammable and combustible liquids require careful handling at all times. Many of these liquids are used by the Air Force and mishandling of these is a significant cause of injury or occupational illness. Hazards associated with use of flammable or combustible liquids include explosions, burns from fire, chemical burns, asphyxiation, inhalation of vapors, absorption through the skin, skin irritation, and eye damage from direct contact or exposure. The volatility of flammable or combustible liquids is increased by heat and when heated to temperatures higher than their flashpoints, they present a greater hazards.

22.4.1.1. There are also some solvents used by the Air Force with flammable characteristics that must be handled with care. Solvents can burn or explode if handled or used improperly.

22.4.1.2. Air Force personnel must be made aware of the hazards associated with the use of flammable and combustible liquids at the worksite. Job safety training should include, as a minimum: information on the need for and use of approved PPE; maintenance and care of PPE, safe chemical handling procedures; and emergency treatment practices in case of exposure, ingestion or inhalation of liquids or vapors. Refer to **Chapter 14**, Personal Protective Equipment, and AFOSH Standard 161-21 for additional guidance.

22.4.1.3. There are some flammable and combustible liquids, which are highly reactive with other substances, subject to explosive decomposition, or with other properties that dictate extra safeguards. Consult your local ground safety and (or) BE or fire protection staff when in doubt. The following lists some common water-reactive substances:

22.4.1.3.1. Alkali Metals (Lithium [Li]),

22.4.1.3.2. Potassium (Kalium [K],

22.4.1.3.3. Sodium (Natrium [Na]),

22.4.1.3.4. Cerium (Ce)

22.4.1.3.5. Calcium

22.4.1.3.6. Hydrides

22.4.1.3.7. Phosphorous Tricloride

22.4.1.3.8. Phosphorous Pentasulfide

NOTE: Water-reactive materials should not be stored where fire protection sprinklers are in place. These materials should not be stored with flammable or combustible liquids. (Refer to OSHA Interpretation, 29 CFR 1910.106. and 2000 Emergency Response Guide)

22.4.1.4. Sparks resulting from the accumulation of static electricity can be a cause of ignition of flammable vapors or gases. The flow of flammable liquids through non-conductive hoses or passages can also produce static charges. Unless safely conducted to a ground, these charges accumulate and are capable of producing an ignition source. (NFPA 30.)

22.4.1.5. Supervisors and workers engaged in operations where fuels, solvents, or other flammable liquids are used must be constantly alert to avoid unsafe practices. It is hazardous to use fuels such as gasoline to clean floors or clothing; to use solvents such as lighter fluid; and to use open solvent or gasoline containers near electrical equipment or pilot lights. The use of low-flashpoint petroleum solvents should be avoided when possible. Open flames, open heaters, equipment not

properly grounded, and non explosion-proof electrical equipment used in the presence of flammable or combustible liquids should be avoided. (NFPA 30.)

22.4.2. Facility Pre-Fire Plans. Facility pre-fire plans will be developed for flammable and combustible liquid warehouses, laboratory, and storage buildings. These plans will be maintained in the fire department communications center and on vehicles designated by the fire chief (see AFI 32-2001, *The Fire Protection Operations and Fire Prevention Program*). The plans include the hazardous materials contained in installation facilities, their locations, and emergency procedures to be followed.

22.4.3. Containers. Containers and portable tanks will be purchased to meet the handling, storage, and dispensing requirements specified in this standard for the type product concerned.

22.4.3.1. The capacity of flammable and combustible liquid containers will be according to **Table 22.1.**, except that glass or plastic containers of no more than 1-gallon capacity may be used for Class IA or IB flammable liquids if: (NFPA 30.)

22.4.3.1.1. Such liquid either would be rendered unfit for its intended use by contact with metal or would excessively corrode a metal container so as to create a leakage; and

22.4.3.1.2. The user's process would either require more than 1 pint of a Class IA liquid or more than 1 quart of a Class IB liquid of a single assay lot to be used at one time, or would require the maintenance of an analytical standard liquid of a quantity which is not met by the specified standards of liquids available, and the quantity of the analytical standard liquid required to be used in any one control process exceeds one-sixteenth the capacity of the container allowed under **Table 22.1.** for the class of liquid.

22.4.3.2. Flammable liquids shall be kept in covered containers when not in use. (NFPA 30.)

22.4.3.3. Storage of flammable and combustible liquids shall be prohibited in office occupancies except that which is required for maintenance and operation of building and operation of equipment. Such storage shall be in closed metal containers stored in a storage cabinet or in safety cans or an inside storage room not having a door that opens into that portion of the building used by personnel. (Reference NFPA 30.)

22.4.4. Storage Cabinets. All flammable/combustible storage cabinets must be listed/approved for the specific class of storage. Not more than 120 Gallons of Class I, Class II, and Class IIIA liquids may be stored in a storage cabinet. The combined total of Class I and Class II liquids may not exceed 60 gallons per storage cabinet. Not more than three such cabinets (120 gallons each) may be located in a single fire area except in an industrial area. (Refer to **Attachment 1** for definition of a fire area.) Additional cabinets may be located in the same fire area of an industrial area if the additional cabinet, or group of more than three (120 gallons each) cabinets, is separated from other cabinets or group of cabinets by at least 100 feet. **NOTE:** The limit of three cabinets in a single area can be increased where smaller cabinets are used. However, the maximum amount of flammable storage cannot exceed that which could be stored in three 120-gallon capacity cabinets, (360 gallons total). (Reference NFPA 30.)

22.4.4.1. Cabinets will be labeled with conspicuous lettering, "Flammable — Keep Fire Away." Additional guidance for marking storage containers is contained in **Chapter 20**, Safety Color Coding, Labeling, and Marking.

22.4.4.2. The cabinet is not required to be vented for fire protection purposes; however, the following shall apply: (Reference NFPA 30.)

22.4.4.2.1. If the cabinet is vented for whatever reasons, the cabinet inlet shall be vented outdoors in such a manner that will not compromise the specified performance of the cabinet. (Reference NFPA 30.)

22.4.4.2.2. If the cabinet is not vented, the vent opening shall be sealed with the bungs supplied with the cabinet or with bungs specified by the manufacturer of the cabinet. (Reference NFPA 30.)

22.4.4.3. Storage cabinets that meet at least one of the following sets of requirements shall be acceptable for the storage of liquids.

22.4.4.3.1. Storage cabinets that are designated and constructed to limit the internal temperature at the center of the cabinet and 1 inch (2.5 centimeter [cm]) from the top of the cabinet to not more than 325 degrees F (162.8 degrees C), when subjected to a 10-minute fire test that simulates the fire exposure of the standard time-temperature curve specified in NFPA 251, *Standard Methods of Tests of Fire Endurance of Building Construction and Materials*, shall be acceptable. All joints and seams shall remain tight and the door shall remain securely closed during the test.

22.4.4.3.2. Listed storage cabinets that have been constructed and tested according to requirements in paragraph **22.4.4.3.1.** shall be acceptable.

22.4.5. Inside Storage Rooms:

22.4.5.1. Inside storage rooms will be constructed to meet the specifications of NFPA Standard 251 and the required fire-resistive rating for their use. Openings to other rooms or buildings will have noncombustible liquid-tight raised sills or ramps at least 4 inches in height or, as an alternative; the floor in the storage area will be at least 4 inches lower than the surrounding floor. Rooms will be liquid-tight where walls join the floor. An additional alternate to the sill or ramp is an open-grated trench inside the room draining to a safe location. Self-closing fire rated doors meeting the requirements of NFPA Standard 80, *Standard for Fire Doors and Fire Windows*, will be used. Where other portions of the building or other properties are exposed, windows will be protected as required by NFPA Standard 80. Wood of at least 1-inch nominal thickness may be used for shelving, racks, dunnage, scuffboards, and floor overlay. (NFPA 30.)

22.4.5.2. Class I liquids shall not be stored or handled within a building having a basement or pit which flammable vapors can travel, unless such area is provided with ventilation that will prevent the accumulation of flammable vapors. (NFPA 30.)

22.4.6. Electrical. Electrical wiring and equipment located in inside storage rooms used for the storage of Class I liquids shall be suitable for Class I, Division 1 hazardous (Reference 29 CFR 1926.152, Flammable and Combustible Liquids and NFPA 70) (classified) locations.

22.4.6.1. Electrical equipment and wiring in inside storage rooms used for the storage of only Class II and Class III liquids shall be suitable for general purpose use. (See NFPA Standard 70, National Electrical Code, for information on the design and installation of electrical wiring and equipment).

22.4.6.2. Transfer of flammable liquids from one container to another shall be done when containers are electrically interconnected (bonded). When flammables are not being transferred from one container to another, there is no requirement to have the containers bonded. (29 CFR 1910.106.)

22.4.7. Ventilation. Liquid storage areas where dispensing is conducted shall be provided with either a gravity or continuous mechanical exhaust ventilation system. Areas, in which flammable or combustible liquids are transferred simultaneously of quantities greater than 5 gallons from one container to another to tank or container, shall be separated from the other operation by 25-feet distance or by construction having a fire resistance of at least 1 hour. Drainage or other means shall be provided to control spills. Adequate natural or mechanical ventilation shall be provided to maintain the concentration of flammable vapors at or below 10 percent Lower Explosive Limit (LEL) of the flammable limit. Mechanical ventilation shall be used if Class I liquids are dispensed within the room. (Reference 29 CFR 1910.106.)

22.4.7.1. Exhaust air shall be taken from a point near a wall on one side of the room and within 1 foot of the floor with one or more make-up inlets located on opposite side of the room within 1 foot of the floor. The location of both the exhaust and inlet air openings shall be arranged to provide air movement across all portions of the floor to prevent accumulation of flammable vapors. Exhaust from the room shall be directly to the exterior of the building without re-circulation. (Reference 29 CFR 1910.106.)

22.4.7.2. Mechanical ventilation systems shall provide for a complete change of air within the room at least 6 times per hour. If a mechanical exhausting system is used, it shall be controlled by a switch located outside the door. The ventilating equipment and any lighting fixtures shall be operated by the same switch. An electric pilot light shall be adjacent to the switch if flammable liquids are dispensed within the room. The mechanical ventilation system for dispensing areas shall be equipped with an airflow switch or equally reliable method that is interlocked to sound an audible alarm upon failure of the ventilation system. (Reference 29 CFR 1910.106.)

22.4.7.3. Exhaust and lighting system controls shall be located outside the door. This switch shall control both the lights and ventilation systems. The switch shall be illuminated. (29 CFR 1910.106.)

22.4.7.4. Ventilation ducts and airflow requirements shall comply with AFOSH Standard 48-2, Industrial Ventilation, and NFPA 91, *Standard for Exhaust Systems for Air Conveying of Materials.*

22.4.8. Additional Requirements for Inside Rooms. For storage capacity and required fire resistive ratings for inside rooms, refer to **Table 22.2.** Storage rooms will not have an opening into any portion of a building used by the public. At least one clear 3-foot wide aisle will be maintained in all inside storage areas. Containers in excess of 30-gallon capacity will not be stacked one upon the other. Dispensing will be according to requirements in paragraph **22.4.6.2.** for Class I flammable liquids. All other dispensing will be by approved pump or self-closing faucet only. (29 CFR 1910.106.)

22.4.8.1. At least one portable fire extinguisher having a rating of not less than 40-B shall be located outside of, but not more than 10 ft from the door opening into an inside liquid storage area. (NFPA 30.)

22.4.8.2. At least one portable fire extinguisher rated not less than 40-BC shall be located within 30 ft. of any Class I or Class II liquid storage area outside of storage room but inside a building. (Reference NFPA 30.)

22.4.8.3. Installed fire suppression systems shall be approved per requirements in Military Handbook (MIL-HDBK)-1008, *Fire Protection for Facilities, Engineering, Design, Construction,*

(Also see **Chapter 6**, Fire Protection, for guidance). (In addition, consult the installation fire department. ([NFPA 30].)

22.4.9. Storage Inside Buildings. When the storage of flammable or combustible liquids is required and the storage is incidental and not the primary purpose of the area, storage will comply with NFPA 30:

22.4.9.1. Storage of flammable or combustible liquids shall not physically obstruct a means of egress from the building or area. Flammable and combustible liquids will not be placed in such a manner that a fire would prevent safe egress from the area. (NFPA 30.)

22.4.9.2. Containers will remain tightly sealed except when transferred, poured, or applied. Workers will remove only that portion of liquid from the storage container required to accomplish a particular job. (NFPA 30.)

22.4.9.3. Leaking containers shall be removed to a safe location outside the building and the contents transferred to an undamaged container. (NFPA 30.)

22.4.9.4. If a flammable and combustible liquids storage building is used, it will be a one-story building devoted principally to the handling and storing of flammable or combustible liquids. The building will have 2-hour fire-rated exterior wall having no openings within 10 feet of the stored material. (NFPA 30.)

22.4.9.5. Flammable paints, oils, and varnishes in 1 to 5 gallon containers, used for building maintenance purposes, may be stored temporarily in closed metal containers outside approved storage cabinets or rooms if kept at the job site for less than 10 calendar days. (NFPA 30.)

22.4.9.6. At least one portable fire extinguisher having a rating of not less than 12-B units shall be located outside of, but not more than 10 feet from the door opening into any room used for storage of flammable or combustible liquids. (NFPA 30.)

22.4.9.7. Water reactive materials will not be stored in the same room with flammable or combustible liquids. EXCEPTION: Small quantities may be stored in laboratories. Refer to paragraphs **22.5.1.** (NFPA 30.)

22.4.9.8. Base supply warehouses, base exchange storage rooms, and commissary storage areas will be according to **Table 22.3.** Buildings or portions of such buildings utilized for flammable and (or) combustible storage will be isolated by standard fire walls approved for the type and quantity of liquids being stored. Materials which create no fire hazard may be stored in the same area. (29 CFR 1910.106.)

22.4.9.9. When flammable or combustible liquids warehouse or storage is within 50 feet or less of a building or adjoining property line that may be built upon, the wall facing the building or property lines will be blank wall having a fire-resistance rating of at least 2 hours. (29 CFR 1910.106)

22.4.9.10. The total quantity of liquids within a building is not restricted, but arrangement of storage will comply with **Table 22.3.** and **Table 22.4.** (29 CFR 1910.106.)

22.4.9.11. Stacked containers of flammable liquids will be separated by pallets or dunnage, where necessary, to provide stability and to prevent excessive stress on container walls. (29 CFR 1910.106)

22.4.9.12. Portable tanks stored over one tier high will be designed to nest securely, without dunnage. Adequate materials handling equipment will be available to handle tanks safely at the upper tier level. (29 CFR 1910.106)

22.4.9.13. No stack will be closer than 3 feet to the nearest beam, chord, girder, or other construction member and will be at least 3 feet below sprinkler deflector or discharge orifice of water spray or other installed fire protection systems. (29 CFR 1910.106)

22.4.9.14. Aisles at least 3 feet wide shall be provided for clear access to all doors, windows, or fire department standpipe connections. (29 CFR 1910.106)

22.4.9.15. All containers shall be clearly labeled to identify contents and indicate hazards. (29 CFR 1910.106)

22.4.10. Outside Storage. **Table 22.5.** and **Table 22.6.** provide maximum quantities and separation criteria for outside storage of flammable and combustible liquids. (29 CFR 1910.106)

22.4.10.1. Maximum storage of 1,100 total gallons of flammable or combustible liquids may be located adjacent to other buildings provided: (NFPA 30.)

22.4.10.1.1. A minimum distance of 10 feet between buildings and nearest container of flammable or combustible liquid is maintained;

22.4.10.1.2. The storage area is graded according to paragraph **22.4.10.3.**; and

22.4.10.1.3. The storage area is protected against tampering or unauthorized entry where necessary and is kept free of weeds, debris, and other combustible material not necessary to the storage.

22.4.10.2. Where the quantity stored exceeds 1,100 gallons, refer to **Table 22.6.** for quantities and separation distances. (29 CFR 1910.106)

22.4.10.3. The storage area will be graded to divert possible spills away from buildings or other facilities or will be surrounded by a curb at least 6 inches high. When curbs are used, provisions will be made for draining accumulations of ground or rainwater or spills of flammable or combustible liquids. Drains shall terminate at a safe location and shall be accessible to operation under fire conditions. (29 CFR 1910.106)

22.4.10.4. At least one portable fire extinguisher rated not less than 20-B will be located not less than 10 feet, nor more than 25 feet, travel distance of any Class I or Class II liquid storage area outside of a storage room. (29 CFR 1910.106)

22.4.10.5. Installed fire suppression systems will be approved per requirements in MIL-HDBK-1008 (see AFOSH Standard 91-56 for guidance). In addition, the installation fire department will be consulted.

22.4.10.6. Containers and portable tanks used for Class I liquids will be electrically grounded and bonded during liquid transfer. Positive measures will be taken to eliminate any source of ignition; open flames, electrical, smoking, cutting and welding, hot surfaces, static, mechanical sparks, radiant heat, or spontaneous ignition sources. (29 CFR 1910.106)

22.4.10.7. All containers having flammable or combustible materials will be protected from heat sources since heat will cause the content to expand and pressurize the container. This, in turn, may

rupture the container. Open flame or smoking will not be permitted in or within 50 feet of flammable or combustible liquid storage areas. (CFR 1910.106)

22.4.10.8. Welding, cutting, or brazing will be accomplished according, Welding, Cutting, and Brazing. (29 CFR 1910.106)

22.4.11. Handling Flammable and Combustible Liquids. Flammable and combustible liquids will be drawn from or transferred into vessels, containers, or portable tanks within a building only through a closed piping system, from safety cans, by means of a device through the top, or from a container or portable tanks by gravity through an approved self-closing valve. Transferring by means of air pressure on the container or portable tanks is prohibited. (29 CFR 1910.106.)

22.4.11.1. Only approved safety containers will be used for transporting and dispensing flammable liquids in quantities of 5 gallons or less. (29 CFR 1910.106.)

22.4.11.2. Flammable liquids will be kept in covered containers when not actually in use. (29 CFR 1910.106.)

22.4.11.3. Means should be provided to clean up and remove spills. Refer to appropriate Material Safety Data Sheet (MSDS) for spill clean-up procedures and PPE required. (29 CFR 1910.106.)

22.4.11.4. Class I liquids will be used only where there are no open flames or other sources of ignition within the area or possible path of vapor travel. (29 CFR 1910.106.)

22.4.11.5. Safety cans or other portable containers of flammable liquids having a flashpoint at or below 80 degrees F will be red in color with some additional clearly visible identification either in the form of a yellow band around the container or the name of the contents conspicuously stenciled or painted on the container in yellow, unless required by technical data to be painted “tone down”. The contents will be conspicuously stenciled in black. EXCLUSION: Shipping containers (29 CFR 1910.106 & NFPA 30).

22.4.12. Incidental Storage of Flammable Liquids in Industrial Areas. Incidental storage will be authorized only after the following requirements are met: (NFPA 30.)

22.4.12.1. Incidental storage will be in industrial areas only; (NFPA 30.)

22.4.12.2. Storage will be in metal cabinets stenciled, “FLAMMABLE--KEEP FIRE AWAY” (metal wall lockers meet this requirement); (NFPA 30.)

22.4.12.3. Storage will be limited to 1 gallon (4 liters) of Class I or 10 gallons (40 Liters) of Class II and Class III liquids, not to exceed 10 gallons (40 liters) total per cabinet, in closed containers. Storage will be limited to a 5-day supply of flammables in metal cabinet, and in closed containers not to exceed limits specified in paragraphs **22.4.8.** and **22.4.10.** Each work center will be limited to one cabinet; (NFPA 30.)

22.4.12.4. Fire department officials shall be consulted prior to establishing incidental storage areas in industrial shops. (NFPA 30.)

22.5. Specific Applications:

22.5.1. Laboratories:

22.5.1.1. General. Many laboratory operations require special control of flammable and combustible liquids to protect personnel and equipment. Two types of laboratories are covered by this sec-

tion: general laboratories and health-related laboratories. Refer to terms explained in **Attachment 1** and **Table 22.5.** and **Table 22.6.** (NFPA 30.)

22.5.1.2. A list of working supplies and operating instructions on handling of flammable and combustible liquids will be published. The aggregate total outside of storage cabinets in any laboratory will not exceed 10 gallons. All quantities of flammable and combustible liquids in one laboratory in excess of 10 gallons will be stored in an approved storage cabinet or in an approved storage room. Flammable or combustible liquids will not be stored or transferred from one vessel to another in any exit way, corridor, or passageway leading to an exit. A minimum of one approved storage room will be available within any building housing a laboratory which regularly maintains a reserve storage capacity in excess of 300 gallons. (NFPA 45)

22.5.1.3. Flammable or combustible liquids shall not be brought into a laboratory, receiving, storage area, or storage facility unless adequately approved design, construction, and fire protection requirements are suitable for the hazard and quantity involved. Container types and maximum capacities will comply with either **Table 22.7.** or **Table 22.8.** appropriate. Plastic containers are sometimes used to avoid breakage problems posed by glass containers or contamination problems with metal containers. When used, plastic containers must be approved for the liquid used. Containers used to draw from an original container must be marked to identify its contents. Refrigerators or cooling equipment used to store or cool flammable liquids will be of an approved type for the material being stored or cooled. Refrigerators or cooling equipment will be labeled or stenciled "Approved for Flammable Liquid Storage." See NFPA Standard 45, *Standard on Fire Protection for Laboratories Using Chemicals*, appendix A for additional details on "explosion proof," "laboratory-safe," modified domestic, or unmodified domestic refrigerators to achieve degrees of protection and appropriate labeling requirements. (NFPA 45.)

22.5.1.4. Flammable and combustible liquids will not be positioned near Bunsen burners, hot surfaces, steam pipes, valves, or other sources of heat. (NFPA 45.)

22.5.1.5. Refer to AFOSH Standard 48-22, *Occupational Exposure to Hazardous Chemicals in Laboratories*, for additional information regarding flammable, combustible, and hazardous materials handling in laboratories.

22.5.2. Fire Protection. All laboratories will have fire protection appropriate for their fire hazard classification. Fire protection will include, as a minimum, portable fire extinguishers, an alarm system, and an evacuation and emergency plan. For additional details regarding required fire protection requirements, refer to NFPA 45, *Standard on Fire Protection for Laboratories Using Chemicals*.

22.5.3. Disposal. Hazardous materials will normally be removed and disposed by a commercial disposal specialist who must comply with published environmental regulations. Contact the installation environmental coordinator in the Civil Engineering organization for assistance. Also refer to AFI 32-7042, *Solid and Hazardous Waste Compliance*.

22.6. Military Exchanges, Commissaries, and Associate Retail Stores. In rooms or areas accessible to the public, storage will be limited to quantities needed for display and normal merchandising purposes not to exceed 2 gallons per square foot of gross floor area. The gross floor area used for computing the maximum quantify permitted is that portion of the store actually being used for merchandising flammable and combustible liquids. (NFPA 30)

22.6.1. Storage of Class IA liquids shall be prohibited in basement display areas and limited to 1 gallon per square foot on any other floor. In areas not protected, storage of Class IB, IC, and II liquids on other than the ground floor shall be limited to 1 gallon per square foot of gross floor area. Protected shall mean protected with automatic sprinklers installed according to NFPA Standard 13, Standard for the Installation of Sprinkler Systems.

22.6.2. On floors above the ground level, the storage or display of Class I and Class II liquids shall be limited to 60 gallons in unprotected occupancies and 120 gallons in protected occupancies. (NFPA 30.)

22.6.3. Containers in a display area will not be stacked more than 3 feet or two containers high, whichever is greater. (NFPA 30.)

22.6.4. Shelving will be capable of supporting the load and containers on shelves must be arranged so they are not easily knocked off the shelves to the floor. (NFPA 30.)

22.6.5. Leaking containers will be removed to a safe location outside the building, the contents transferred to an undamaged container, appropriately labeled, and the leaking container disposed in a safe manner. (NFPA 30.)

22.6.6. Storage will be according to **Table 22.3.** Buildings or portions of such buildings utilized for flammable and (or) combustible storage will be isolated by standard fire walls approved for the type and quantity of liquids being stored. Materials which create no fire hazard to the liquids may be stored in the same area. (NFPA 30.)

22.6.7. If the storage building is located 50 feet or less from a building or adjacent property line that may be built upon, the wall facing the building or property lines will be a blank wall having a fire-resistance of at least 2 hours. (29 CFR 1910.106)

22.6.8. The total quantity of liquids within the building is not restricted, but the arrangement of storage will comply with **Table 22.3.** (NFPA 30.)

22.6.9. Stacked containers of flammable liquids will be separated by pallets or dunnage, where necessary, to provide stability and to prevent excessive stress on container walls. (NFPA 30.)

22.6.10. No stack will be closer than 3 feet to the nearest beam, chord, girder, or other construction object, and will be at least 3 feet below sprinkler deflectors or discharge orifices of water spray or other installed fire protection systems. (NFPA 30.)

22.6.11. Aisles at least 3 feet wide will be provided for clear access to doors, windows, or fire department connections. (NFPA 30.)

22.6.12. Containers will bear clearly legible labels to identify contents and indicate hazards. (NFPA 30.)

22.7. Small Gasoline Engine Powered Equipment. This section applies to: lawnmowers, snow blowers, generators, outboard marine motors, portable water pumps, small watercraft, powered gardening tools, and other implements powered by gasoline engines normally 5-horsepower or less. (Reference National Safety Council [NSC], Accident Prevention Manual, 11th Edition).

22.7.1. Fueling operations will be conducted in outside areas free from ignition sources. Fuel tanks will not be filled or drained inside buildings or other facilities where fuel vapors or other explosive gases can accumulate. (NSC, Accident Prevention Manual, 11th Edition).

22.7.2. Operators will not refuel a running engine or one that is hot from recent use. They will allow a minimum of 5 minutes cooling time before starting refueling operations. (NSC, Accident Prevention Manual, 11th Edition).

22.7.3. Fueling and (or) refueling operations will be accomplished using a safety can with pouring spout or an appropriate sized funnel. Care will be taken not to spill fuel onto hot surfaces. Spilled fuel will be cleaned up before attempts are made to start equipment. (NSC, Accident Prevention Manual, 11th Edition).

22.7.4. Equipment will be serviced after use and prior to extended off-season storage:

22.7.4.1. Equipment will be stored according to manufacturer's instructions.

22.7.4.2. The operator will ensure it is thoroughly cleaned, functioning properly, and the fuel tank is drained. (NSC, Accident Prevention Manual, 11th Edition).

22.7.4.3. Storage facilities will be protected against tampering or unauthorized entry and area around the facility will be kept free of weeds, debris, and other combustibles. (NSC, Accident Prevention Manual, 11th Edition).

22.7.4.4. Storage facilities will be inspected frequently by supervisor or building custodian. (NSC, Accident Prevention Manual, 11th Edition).

22.7.5. Gasoline powered equipment will not be stored in military family housing living areas, including basements, unless the storage room or area has walls and is separated from the living area by an un-pierced 1-hour rated fire-resistant partition and ceiling. All storage areas must be inspected and approved by installation fire authorities.

22.7.6. Custodians of dormitories, multiple living quarters, assembly, institutional, military exchange, commissary and warehouse facilities will store small gasoline powered equipment in an enclosed 1-hour fire-rated storage room. Boiler rooms and other utility rooms will not be utilized as storage areas. (NFPA 30.)

22.7.7. Cleaned and drained small gasoline powered equipment may be stored during the off-season in inspection and testing facilities, munitions maintenance facilities, fire stations, shops, and maintenance facilities. However, this equipment will not be stored in hangars, nose docks, corrosion control, fuel cell repair, or missile assembly and repair facilities. When stored, the equipment will be isolated from potential ignition sources.

(NFPA 30.)

22.7.8. Storage in theaters, conference facilities, open messes, clubs, recreation facilities, dormitories, temporary quarters, or multiple unit family housing buildings containing more than three dwelling units, and hotels is limited to 10 gallons or less of Class I and II liquids and 20 gallons or less of Class III liquids stored in containers in an approved storage container or in safety cans. (NFPA 30.)

22.7.9. Storage of Class I, II, III liquids is limited to 10 gallons per resident unit. Included are single residences and those dwellings containing not more than three dwelling units with attached or detached garages. (NFPA 30)

Table 22.1. Maximum Allowable Size Containers and Portable Tanks.

	Flammable Liquids			Combustible Liquids	
Class	1A	1B	1C	II	III
Container Type	1 pt	1 qt	1 gal	1 gal	1 gal
Glass or approved plastic[1]					
Metal	1 gal	5 gal	5 gal	5 gal	5 gal
(Other than Department of Transportation [DOT] Drums)					
Safety cans	2 gal	5 gal	5 gal	5 gal	5 gal
Metal Drums	60 gal	60 gal	60 gal	60 gal	60 gal
(DOT Specification)					
Approved portable tanks	660 gal	660 gal	660 gal	660 gal	660 gal
Polyethylene DOT	1 gal	5 gal	5 gal	60 gal	60 gal
Specification 34 or as					
authorized by DOT exception.					

Reference 29 CFR 1910.106, Table H-12.

NOTE:

[1]Nearest metric size is also acceptable for glass and plastic containers listed.

Table 22.2. Storage in Inside Rooms.

Fire Protection (**NOTE:** 2) Provided	Fire Resistance	Maximum Size	Total Allowable Quantities (**NOTE:** 1) (gals/sq. ft. floor area)
Yes	2 Hours	500 Sq. Ft.	10
No	2 Hours	500 Sq. Ft.	5
Yes	1 Hour	150 Sq. Ft.	4
No	1 Hour	150 Sq. Ft.	2

Reference 29 CFR 1910.106, Table H-13

NOTES:

1. If metric containers are being stored, use the nearest metric equivalent.
2. Fire protection system will be sprinkler, water spray, or equivalent.

Table 22.3. Indoor Container Storage.

Class Liquid	Storage Level	Protected Storage (Sprinkler System) Maximum per Pile Gallons	Unprotected Storage Maximum per Pile Gallons
IA	Ground & Upper Floors	2,750	660
	55 Gallon drums	(50)	(12)
	Basement	Not Permitted	Not Permitted
IB	Ground & Upper Floors 55 Gallon drums Basement	5,500 (100)	1,375 (25)
IC	Ground & Upper Floors	5,500	1,375
	55 Gallon drums	(100)	(25)
	Basement	Not Permitted	Not Permitted
II	Ground & Upper Floors	16,500	4,125
	55 Gallon drums	(300)	(75)
	Basement	5,500	Not Permitted
III	Ground & upper Floors	55,000	13,750
	55 Gallon drums	(1000)	(250)
	Basement	8,250	Not Permitted
	55 Gallon drums	(150)	

Reference 29 CFR 1910.106, Table H-14.

NOTES:

1. When two or more classes of materials are stored in a single pile, the maximum gallonage permitted in that pile will be the smallest of the two or more separate gallonages.
2. Aisles in general purpose warehouse storage will be provided so no container is more than 12 feet from an aisle. Main aisles shall be at least 3 feet wide and side aisles at least 4 feet wide.
3. Each pile shall be separated from each other by at least 4 feet.
4. Refer to paragraph **22.6.** for information on the storage of flammable aerosol containers classified as Class I liquids and stored in military exchanges, commissaries, or associated retail stores.
5. Numbers in parentheses indicate corresponding number of 55-gallon drums.

Table 22.4. Indoor Portable Tank Storage

Class Liquid	Storage Level	Protected Storage (Sprinkler System) Maximum per Pile Gallons	Unprotected Storage Maximum per Pile Gallons
IA	Ground & Upper Floors	Not Permitted	Not Permitted
	Basement	Not Permitted	Not Permitted
IB	Ground & Upper Floors	20,000	2,000
	Basement	Not Permitted	Not Permitted
IC	Ground & Upper Floors	40,000	5,500
	Basement	Not Permitted	Not Permitted
II	Ground & Upper Floors	40,000	5,500
	Basement	20,000	Not Permitted
III	Ground & Upper Floors	60,000	22,000
	Basement	20,000	Not Permitted

Reference 29 CFR 1910.106, Table H-15.

NOTES:

1. When one or more classes of material are stored in a single pile, the maximum gallonage permitted in the pile will be the smallest of the two or more separate maximum gallonages.

2. Aisles will be provided so no portable tank is more than 12 feet from an aisle. Main aisles will be at least 8 feet wide and side aisles at least 4 feet wide.

3. Each pile will be separated from each other by at least 4 feet.

Table 22.5. Outdoor Container Storage

Liquid Classification	Maximum Gallons per pile[1]	Distance between piles (ft)[2]	Distance to property line that can be built upon (ft)[3 & 4]	Distance to street, alley, public way (ft)[4]
IA	1,100	5	20	10
IB	2,200	5	20	10
IC	4,400	5	20	10
II	8,800	5	10	5
III	22,000	5	10	5

Reference 29 CFR 1910.106, Table H-16

NOTES:

[1] When two or more classes of material are stored in a single pile, the maximum gallonage in that pile shall be the smallest of the two or more separate gallonages.

[2] Within 200 feet of each container, there shall be a 12-foot wide access way to permit approach of fire control apparatus.

[3] The distance listed applies to properties that have protection for exposures as defined. If there are exposures, and such protection for exposures do not exist, the distance in column 4 (distance to property line that can be built upon) shall be doubled.

[4] When total quantity stored does not exceed 50 percent of maximum pile, the distance in column 4 (distance to property line that can be built upon) and column 5 (distance to street, alley, public way) may be reduced 50 percent, but not less than 3 feet.

Table 22.6. Outdoor Portable Tank Storage

Class	Maximum per pile (Gallons)[1]	Distance between piles (ft)[2]	Distance to property line that can be built upon (ft)[3 & 4]	Distance to street, alley, public way[4] FT.
IA	2,200	5	20	10
IB	4,400	5	20	10
IC	8,800	5	20	10
II	17,600	5	10	5
III	44,000	5	10	5

Reference 29 CFR 1910.106, Table H-17.

NOTES:

[1] When two or more classes of material are stored in a single pile, the maximum gallonage in that pile shall be the smallest of the two or more separate gallonage.

[2] Within 200 feet of each portable tank, there shall be a 12-foot wide access way to permit approach of fire control apparatus.

[3] The distance listed applies to properties that have adequate protection for structures adjacent to the storage tanks. If there are exposures, and such protection does not exist, the distance to the property line that can be built upon shall be doubled.

[4] When total quantity stored does not exceed 50 percent of the maximum per pile, the distance to property line that can be built upon and distance to street, alley, and public way may be reduced 50 percent, but not less than 3 feet.

Table 22.7. Maximum Allowable Size of Containers — General Laboratories

Class of Flammable or Combustible Liquid	IA	IB	IC	II	III
Container Type					
Glass	1 pt[1]	1 qt[1]	1gal[2]	1gal[2]	1gal[2]
Metal (Other than DOT drums) and Approved Plastic Safety Cans	1 gal	5 gal[3]	5 gal[3]	5 gal[3]	5 gal[3]
Safety Cans (metal)	2 gal	5 gal[3]	5 gal[3]	5 gal[3]	5 gal[3]
Metal drums (DOT Spec)	N/A	5 gal[3]	5 gal[3]	60 gal[3]	60 gal[3]

Reference NFPA 45.

NOTES:

[1] Nearest metric equivalent is acceptable. Sizes as large as 1 gallon or 4 liters may be used if the liquid would be adversely affected by storage in metal or if the liquid would cause excessive corrosion of the metal container.

[2] Nearest metric equivalent.

[3] In instructional laboratories, containers of Class I or Class II liquids will not exceed 1 gallon or 3 liters, except for safety cans where 2 gallons capacity may be used.

Table 22.8. Maximum Allowable Size of Containers — Health-Related Laboratories

Class of Flammable or Combustible Liquid	IA	IB	IC	II	III
Glass or approved plastic[1]	1 pt[2]	1 qt[2]	1 gal[2]	1 gal[2]	1 gal[2]
Safety Cans	1 gal	2 gal	2 gal	2 gal	2 gal

Reference NFPA 45.

NOTES:

[1] Gravity feed containers not permitted.

[2] Nearest metric equivalent is acceptable.

Figure 22.1. CHECKLIST FLAMMABLE AND COMBUSTIBLE LIQUIDS

This is not an all-inclusive checklist. It simply highlights some critical items in this standard. Other requirements exist in the standard that are not included in the checklist. Where appropriate, MAJCOMs, DRUs, FOAs, local safety staffs, and supervisors will add to this checklist to include command or mission and (or) work-unique requirements or situations.

General Requirements:

F22.2. Have all personnel handling, storing or using flammable or combustible liquids received the appropriate levels of training commensurate with the degree of hazard? (Reference **22.4.1.2.**)

F22.3. Have all personnel been provided with the appropriate PPE , been trained on its use, care, maintenance and reporting procedures on unserviceable PPE. (Reference **22.4.1.2.**)

Facility Pre-Fire Plans:

F22.4. Has the Fire Department developed pre-fire plans for the flammable and combustible liquids area? (Reference **22.4.2.**)

General Requirements -- Containers:

F22.5. Have appropriate containers and portable tanks been procured to meet handling, storage, and dispensing requirements? (Reference **22.4.3.**)

F22.6. Is the capacity of flammable or combustible liquid containers according to table 22.1? (Reference **22.4.3.1.**)

F22.7. Are flammable and combustible liquids prohibited from office occupancies except those required for maintenance and operation of building and operating equipment? (Reference **22.4.3.3.**)

Storage Cabinets:

F22.8. Is no more than 120 gallons of Class I, Class II, and Class IIIA liquids being stored in a storage cabinet? (Reference **22.4.4.**)

F22.9. Are no more than three cabinets (120 gallons) located in a single fire area? (Reference **22.4.4.**)

F22.10. If additional cabinets are located in an industrial area are they separated from the others by at least 100 feet? (Reference **22.4.4.**)

F22.11. Are cabinets conspicuously labeled “Flammable — Keep Fire Away”? (Reference **22.4.4.1.**)

F22.12. Are storage cabinets in use designed and constructed to meet the requirements of NFPA 251? (Reference **22.4.4.3.1.**)

F22.13. Are the bottom, top, and sides of metal cabinets at least No 18 gauge sheet steel and double walled with 1-1/2 inch air space? (Reference **22.4.4.3.2.**)

F22.14. Does the door have a three-point lock and is the door sill raised at least 2 inches above the bottom of the cabinet? (Reference **22.4.4.3.2.**)

F22.15. Do existing wood cabinets meet the following criteria? (Reference **22.4.4.3.1.**)

Inside Storage Rooms:

F22.16. Are inside storage rooms constructed to meet the fire-resistive test specifications of NFPA 251? (Reference **22.4.5.1.**)

F22.17. Do openings to other rooms or buildings have noncombustible liquid-tight raised sills or ramps at least 4 inches in height or, as an alternate, is the floor in the storage area at least 4 inches lower than the surrounding floors? (Reference **22.4.5.1.**)

F22.18. Are rooms liquid-tight where walls join the floor? (Reference **22.4.5.1.**)

F22.19. Is the wood used for shelves, racks, dunnage, scuffboards and floor overlays at least 1 inch nominal thickness? (Reference **22.4.5.1.**)

F22.20. Are self-closing fire doors meeting the requirements of NFPA 80 used? (Reference **22.4.5.1.**)

F22.21. Are Class I liquids prohibited from being stored or handled within building having a basement or pit unless ventilation is provided? (Reference **22.4.5.2.**)

Electrical:

F22.22. Does electrical wiring and equipment located within flammable or combustible storage rooms meet the requirements of NFPA 70 for hazardous location as determined by the class of materials stored? (Reference **22.4.6.**)

F22.23. Are containers used for dispensing or transferring of liquids electrically interconnected (bonded) to prevent static discharges? (Reference **22.4.6.2.**)

Ventilation:

F22.24. Is every inside storage room provided with a gravity or mechanical exhaust ventilation system? (Reference **22.4.7.**)

F22.25. Are areas in which flammable or combustible liquids are transferred simultaneously of quantities greater than 5 gallons from one container to another separated from the other operation by 25 feet or by fire-resistant construction of at least 1 hour? (Reference **22.4.7.**)

F22.26. Is drainage provided in locations where dispensing or transfers are accomplished? (Reference **22.4.7.**)

F22.27. Is exhaust air taken from a point near a wall and within 1 foot of the floor on one side of the room with one or more make-up air inlets on the opposite side of the room within 1 foot of the floor? (Reference **22.4.7.1.**)

F22.28. Is the location of both the make-up and exhaust air openings arranged to provide, as practical, air movement across all portions of the floor, to prevent the accumulation of vapors? (Reference **22.4.7.1.**)

F22.29. Does exhaust air from the room go directly to the exterior of the building; and if ducts are used, are they not used for any other purpose? (Reference **22.4.7.1.**)

F22.30. Is duct construction and air movement according to AFOSH Standard 48-2? (Reference **22.4.7.4.**)

Additional Requirements for Inside Rooms:

F22.31. Are storage and fire resistive rating in compliance with **Table 22.2.**? (Reference **22.4.8.**)

F22.32. Are 3-foot aisles maintained in all inside storage areas? (Reference **22.4.8.**)

F22.33. Are containers over 30-gallon capacity not stacked one upon the other? (Reference **22.4.8.**)

F22.34. Is there at least one 40-B portable fire extinguisher located outside of, but not more than 10 ft from the door opening into an inside liquid storage area? (Reference **22.4.8.2.**)

F22.35. Is there at least one portable fire extinguisher rated not less than 40-BC located within 30 feet of any Class I or Class II liquid storage area outside of a storage room but inside a building? (Reference **22.4.8.2.**)

Storage Inside Buildings:

F22.36. Does inside storage comply with the following basic conditions where approved storage cabinets or rooms are not provided? (Reference **22.4.9.**)

F22.36.1. The storage of any flammable or combustible liquids does not physically obstruct a means of egress from the building or area? (Reference **22.4.9.1.**)

F22.36.2. Containers of flammable or combustible liquids remain tightly sealed except when transferred, poured, or applied? Only that portion in the storage container required to accomplish a particular job is removed? (Reference **22.4.9.2.**)

F22.36.3. Leaking containers are removed to a safe location outside the building and the contents transferred to an undamaged container? (Reference **22.4.9.3.**)

F22.36.4. If a flammable or combustible storage building is used, it is a one-story building devoted principally to the handling and storing of flammable and combustible liquids? Does the building have a 2-hour fire rated exterior wall having no openings within 10 feet of such storage? (Reference **22.4.9.4.**)

F22.36.5. Are flammable paints, oils, and varnishes in 1 to 5 gallon containers, used for building maintenance purposes, only stored temporarily in closed containers outside approved storage cabinets or rooms if kept at the job site for less than 10 calendar days? (Reference **22.4.9.5.**)

F22.36.6. Water reactive materials are not stored in the same room with flammable and combustible liquids? (Reference **22.4.9.7.**)

F22.36. Do base supply warehouses, base exchange storage rooms, and commissary storage areas comply with **Table 22.3.**? (Reference **22.4.9.8.**)

F22.37. Are buildings or portions of buildings used for the storage flammable or combustibles storage isolated by standard fire walls approved for the type and quantity of liquids being stored? (Reference **22.4.9.8.**)

F22.38. If the storage building is located 50 feet or less from a building or adjoining property line that may be built upon, is the wall facing the building or property line a blank wall having a fire-resistance rating of at least 2 hours? (Reference **22.4.9.9.**)

F22.39. Does the arrangement of storage within a building comply with **Table 22.3.** and **Table 22.4.**? (Reference **22.4.9.10.**)

F22.40. Are stacked containers of flammable liquids separated by pallets or dunnage, where necessary, to provide stability and to prevent excessive stress on container walls? (Reference **22.4.9.11.**)

F22.41. Are portable tanks which are stored over one tier high designed to nest securely without dunnage? (Reference **22.4.9.12.**)

F22.42. Is adequate material handling equipment available to handle tanks safely at upper tier levels? (Reference **22.4.9.12.**)

F22.43. Is no stack closer than 3 feet to the nearest beam, chord, girder, or other obstruction and at least 3 feet below sprinkler deflector or discharge orifices of water spray or other installed fire protection system? (Reference **22.4.9.13.**)

F22.44. Are aisles at least 3 feet wide provided for clear access to doors, windows, or fire department standpipe connections? (Reference **22.4.9.14.**)

F22.45. Do containers bear clearly legible labels to identify contents and indicate hazards? (Reference **22.4.9.15.**)

Outside Storage: Refer to **Table 22.5.** and **Table 22.6.** for maximum quantities and separation distance criteria for outside storage of flammable and combustible liquids. (Reference **22.4.10.**)

F22.46. If 1,100 total gallons (maximum) of flammable or combustible liquids are located adjacent to another building is: (Reference **22.4.10.1.**)

F22.46.1. A minimum distance of 10 feet between buildings and the nearest flammable or combustible liquid maintained? (Reference **22.4.10.1.1.**)

F22.46.2. The storage area graded according to paragraph **22.4.10.3.**?

FA22.46.3. The storage area protected against tampering or unauthorized entry when necessary? (Reference **22.4.10.1.3.**)

F22.46.4. The storage area kept free of weeds and other combustible material not necessary to storage? (Reference **22.4.10.1.3.**)

F22.47. Where the quantity of stored material exceeds 1,100 gallons do the separation distances comply with **Table 22.6.**? (Reference 2.4.10.2.)

F22.48. When curbs are used, are provisions made for draining accumulations of ground or rain water or spills of flammable or combustible liquids? (Reference **22.4.10.3.**)

F22.49. Do drains terminate at a safe location and are they directly accessible to the fire operations? (Reference **22.4.10.3.**)

F22.50. Is at least one portable fire extinguisher rated not less than 20-B located not less than 10 feet, nor more than 25 feet, travel distance of any Class I or Class II liquid storage area outside of a storage room? (Reference **22.4.10.4.**)

F22.51. Are installed fire suppression systems of an approved type? (Reference **22.4.10.5.**)

F22.52. Are containers and portable tanks used for Class I liquids grounded and bonded during liquid transfer? (Reference **22.4.10.6.**)

F22.53. Are containers having flammable or combustible liquids protected from external heat sources? (Reference **22.4.10.7.**)

F22.54. Are open flame devices or smoking prohibited within 50 feet of the flammable or combustible storage area? (Reference **22.4.10.7.**)

F22.55. Are welding, cutting, and brazing operations accomplished according to AFOSH Standard 91-5? (Reference **22.4.10.8.**)

Handling Flammable and Combustible Liquids:

F22.56. Are flammable or combustible liquids drawn from or transferred into vessels, containers, or portable tanks within a building only through a closed piping system, from safety cans, by means of a device drawing through the top, or from a container or portable tank by gravity through an approved closing valve? (Reference **22.4.11.**)

F22.57. Transferring by means of air pressure on the container or portable tanks is prohibited. (Reference **22.4.11.**)

F22.58. Are approved safety cans used for transporting and dispensing flammable liquids in quantities of 5 gallons or less? (Reference **22.4.11.1.**)

F22.59. Are flammable liquids kept in covered containers when not actually in use? (Reference **22.4.11.2.**)

F22.60. Are plans made and means available to promptly clean up or remove spills? (Reference **22.4.11.3.**)

F22.61. Are Class I liquids used only where there are no open flames or other sources of ignition within the area or possible path of vapor travel? (Reference **22.4.11.4.**)

F22.62. Are safety cans or portable containers of flammable liquids, having a flashpoint at or below 80 degrees F, painted red with some additional clearly visible identification in a yellow band around the can or the name of the contents conspicuously stenciled or painted on the can in yellow? (Excluded are shipping containers.) (Reference **22.4.11.5.**)

Incidental Storage of Flammable Liquids in Industrial Areas:

F22.63. Is incidental storage of flammable liquids only authorized in industrial areas if: (Reference **22.4.12.1.**)

F22.63.1. Storage cabinets are stenciled “Flammable — Keep Fire Away” (Metal wall lockers meet this requirement)? (Reference **22.4.12.2.**)

F22.63.2. Storage is limited to 1 gallon of Class I or 10 gallons of class II and Class III liquid, not exceeding 10 gallons total per cabinet, in closed containers? (Reference **22.4.12.3.**)

F22.63.3. Storage is limited to a 5-day supply of flammables in metal cabinet, and in closed containers not to exceed limits specified in paragraphs **22.4.8.** and **22.4.10.**? (Reference **22.4.12.3.**)

F22.63.4. Each work center is limited to only one cabinet? (Reference **22.4.12.3.**)

Laboratories:

F22.64. Has a list of working supplies and operating instructions on handling of flammable and combustible liquids been developed? (Reference **22.5.1.2.**)

F22.65. Does the aggregate total outside of storage cabinets not exceed 10 gallons of flammable or combustible liquids? (Reference **22.5.1.2.**)

F22.66. If the total quantity of flammable or combustible liquids exceeds 10 gallons, are they stored in an approved storage cabinet or storage room? (Reference **22.5.1.2.**)

F22.67. Are flammable or combustible liquids prohibited from being stored or transferred from one vessel to another in any exit way, corridor, or passageway leading to an exit? (Reference **22.5.1.2.**)

F22.68. Is a minimum of one approved storage room available within any building housing a laboratory which regularly maintains a reserve storage capacity in excess of 300 gallons? (Reference **22.5.1.2.**)

F22.69. Are flammable and combustible liquids prohibited from receiving, storage areas, or storage facilities unless adequately approved design, construction, and fire protection requirements are suitable for the hazard and quantity involved? (Reference **22.5.1.3.**)

F22.70. Are approved plastic, metal, or glass container used when appropriate? (Reference **22.5.1.3.**)

F22.71. Are containers used to draw from an original container marked to identify its contents? (Reference **22.5.1.3.**)

F22.72. Are refrigerators or cooling equipment used to store flammable liquids of the approved type for the material being stored? (Reference **22.5.1.3.**)

F22.73. Are refrigerators or cooling equipment labeled or stenciled “Approved for Flammable Liquid Storage”? (Reference **22.5.1.3.**)

F22.74. Are flammable and combustibles kept away from open flames, hot surfaces, steam pipes, or other heat sources? (Reference **22.5.1.4.**)

F22.75. Do all laboratories have fire protection appropriate for their fire hazard classification? (Reference **22.5.2.**)

<u>Military Exchanges, Commissaries, and Associated Retail Stores:</u>

F22.76. In rooms or other areas accessible to the public, is storage limited to quantities needed for display and normal merchandising purposes not to exceed 2 gallons per square foot of gross floor area? (Reference **22.6.**)

F22.77. Is the gross floor area used for computing the maximum quantity permitted that portion of the store actually being used for merchandising flammable and combustible liquids? (Reference **22.6.**)

F22.78. Are Class IA flammable prohibited in basement areas and limited to 1 gallon per square foot on any other floor? (Reference **22.6.1.**)

F22.79. Are Class IB, IC, and II liquids in areas not protected limited to 1 gallon per square foot of gross floor area? (Reference **22.6.1.**)

F22.80. On floors above ground level, is storage or display of Class I and Class II liquids limited to 60 gallons in unprotected occupancies and 120 gallons in protected occupancies? (Reference **22.6.2.**)

F22.81. Are containers in a display not stacked more than 3 feet or two containers high, whichever is greater? (Reference **22.6.3.**)

F22.82. Is shelving capable of supporting the load and are containers on the shelves arranged so that are not easily knocked off the shelves to the floor? (Reference **22.6.4.**)

F22.83. Are leaking containers removed to a safe location and the contents transferred to an undamaged container, appropriately labeled, and the leaking container disposed of in a safe manner? (Reference **22.6.5.**)

F22.84. Is storage of flammable and combustibles according to table 3.3? (Reference **22.6.6.**)

F22.85. If the storage building is located less than 50 feet from another building or property line that may be built upon, is the wall facing the building or property line blank and have a fire-resistive rating of at least 2 hours? (Reference **22.6.7.**)

F22.86. Is the storage of flammable and combustibles in compliance with **Table 22.3.**? (Reference **22.6.8.**)

F22.87. Are stacked containers separated by pallets or dunnage where necessary, to provide stability and to prevent excessive stress on the containers walls? (Reference **22.6.9.**)

F22.88. Are stacks no closer than 3 feet from the nearest beam, chord, girder, or other construction object, and no closer than 3 feet below sprinkler deflector or discharge orifices of water spray or other installed fire protection system? (Reference **22.6.10.**)

F22.89. Are 3-foot aisles provided for clear access to doors, windows, or fire department connections? (Reference **22.6.11.**)

F22.90. Do all containers bear clearly legible labels to identify contents and indicate hazards? (Reference **22.6.12.**)

Small Gasoline Engine Powered Equipment:

F22.91. Are fueling operations conducted in outside areas free from ignition sources? (Reference **22.7.1.**)

F22.92. Are fuel tanks not filled or drained inside buildings or other facilities where vapors can accumulate? (Reference **22.7.1.**)

F22.93. Are refueling operations conducted after engines have had a minimum of 5 minutes of cooling? (Reference **22.7.2.**)

F22.94. Are refueling operations accomplished using a safety can with pouring spout or funnel? (Reference **22.7.3.**)

F22.95. Are fuel spills appropriately cleaned up before attempting to start any engine? (Reference **22.7.3.**)

F22.96. Is equipment serviced after use? (Reference **22.7.4.**)

F22.97. Prior to extended off-season storage, is the equipment thoroughly cleaned and the fuel tank drained? (Reference **22.7.4.2.**)

F22.98. Are storage facilities protected against tampering or unauthorized entry and the area around the facility free of weeds, debris, and other combustibles? (Reference **22.7.4.3.**)

F22.99. Are all storage areas or facilities inspected frequently by supervision or building custodian? (Reference **22.7.4.4.**)

F22.100. Is gasoline powered equipment not stored in military housing living areas including basements, unless the storage room has a wall to separate it from the living by an un-pierced 1-hour rated fire-resistant partition and ceiling? (Reference **22.7.5.**)

F22.101. Are storage areas in military family housing inspected and approved by the installation fire authorities prior to use? (Reference **22.7.5.**)

F22.102. Do custodians of dormitories, multiple living quarters, assembly, institutional, military exchanges, commissary, and warehouse facilities store small gasoline equipment in an enclosed 1-hour fire-rated storage room? (Reference **22.7.6.**)

F22.103. Are boiler rooms, equipment rooms and other utility rooms not utilized as storage areas? (Reference **22.7.6.**)

F22.104. Are only cleaned and drained small gasoline powered equipment stored during the off-season in inspection and testing facilities, munitions maintenance facilities, fire stations, shops and maintenance facilities? Are there restrictions on storing this equipment in hangars, nose docks, corrosion control, fuel cell repair, or missile assembly and repair facilities? (Reference **22.7.7.**)

F22.105. When stored in approved facilities is the equipment isolated from potential ignition sources? (Reference **22.7.7.**)

F22.106. Is storage limited to 10 gallons of Class I and II liquids and 20 gallons or less of Class III liquids in theaters, conference facilities, open messes, clubs, recreation facilities, dormitories, temporary quarters, multiple unit housing, buildings containing more than three dwelling units, and hotels? (Reference **22.7.8.**)

F22.107. Is storage of Class I, II, III liquids limited to 10 gallons per resident unit in single residences and those dwellings containing not more than three dwelling units with detached garages? (Reference **22.7.9.**)

TIMOTHY A. PEPPE, Maj General, USAF
Chief of Safety

Attachment 1

GLOSSARY OF REFERENCES AND SUPPORTING INFORMATION

References

AF HDBK 32-1084, *Facility Requirements*.

AFI 11-202V1, *Aircrew Training.*

AFI 32-1064, *Electrical Safe Practices.*

AFI 32-2001, *The Fire Protection Operations and Fire Prevention Program*

AFI 32-6002, *Family Housing Planning, Programming, Design, and Construction.*

AFI 32-7042, *Solid and Hazardous Waste Compliance*

AFI 90-901, *Operational Risk Management*

AFI 91-202, *The US Air Force Mishap Prevention Program.*

AFI 91-301, *Air Force Occupational and Environmental Safety, Fire Prevention, and Health (AFOSH) Program.*

AFJMAN 23-210, *Joint Services Manual (JSM) for Storage and Handling.*

AFMAN 91-201, *Explosives Safety Standards.*

AFOSH 48-2, *Industrial Ventilation*

AFOSH 48-8, *Controlling Exposures for Hazardous Materials*.

AFOSH 48-9, *Radio Frequency Radiation (RFR) Safety Program.*

AFOSH 48-19, *Hazardous Noise Program*.

AFOSH 48-20, *Hearing Conservation Program.*

AFOSH 48-22, *Occupational Exposure to Hazardous Chemicals in Laboratories.*

AFOSH 48-137, *Respiratory Protection Program***.**

AFOSH 48-139, *Laser Radiation Protection Program.*

AFOSH 161-2, *Industrial Ventilation*

AFOSH 161-21, *Hazard Communication.*

AFOSH 91-5, *Welding, Cutting, and Brazing.*

AFOSH 91-8, *Medical Facilities.*

AFOSH 91-10, *Civil Engineering.*

AFOSH 91-38, *Hydrocarbon Fuels General.*

AFOSH 91-46, *Materials Handling & Storage Equipment.*

AFOSH 91-50, *Communications Cable, Antenna and Communications-Electronic (C-E) Systems.*

AFOSH 91-66, *General Industrial Operations.*

AFOSH 91-68, *Chemical Safety.*

AFPAM 32-1097, *Sign Standards Pamphlet.*

AFPAM 91-216, *USAF Safety Deployment and Contingency Pamphlet.*

AFM 23-210, *Joint Service Manual (JSM) For Storage and Materials Handling.*

T.O. 1-1-3	*Inspection and Repair of Aircraft Integrals Tanks and Fuel Cells*
T.O. 00-25-172	*Ground Servicing of Aircraft and Static Grounding/Bonding*
T.O. 00-25-234	*General Shop Practice Requirements For the Repair, Maintenance and Test of Electrical Equipment*
T.O. 00-25-232	*Control and Use of Insulating Matting For High-Voltage Application*
T.O. 00-25-245	*Operations Instruction Testing and Inspection Procedures for Personnel Safety and Rescue Equipment*
T.O. 14P3-1-131	*OPN and Maintenance Instruction with IPB – Aircrew Chem-Defense Ensemble*
T.O. 14P3-1-141	*Operation and Maintenance Instruction – Ground Crew Chem-Defense Ensemble*
T.O. 00-25-232	*Control and Use of Insulating Matting for High-Voltage Application*
T.O. 32-1-2	*Use of Hand Tools*
T.O. 34-1-3	*Inspection and Maintenance of Machinery and Shop Equipment*
T.O. 35-1-3	*Corrosion Prevention, Painting and Marking of USAF Support Equipment*
T.O. 47C1-1	*Safety Instruction for Lawn Care Equipment*
T.O. 00-110N-3	*Requisition, Handling, Storage, and Identification of Radioactive Materials*
AFJAM 23-210	*Joint Service Manual (JSM) for Storage and Materials*
DOD 4145.19-R.1,	*Storage and Materials Handling*
Military Handbook 1008C	*Fire Protection for Facilities Engineering design, and Construction*
Military Manual	*(Mil DTL) 15562G Matting or Sheet, Floor Covering Insulating for High Voltage Application*
Military Manual	*(Mil-STD) 101B, Color Code for Pipeline for Compressed Gas Cylinders*
MIL STD- 1472F	*Design Criteria Standard Human Engineering*
NSC	*Accident Prevention Manual For Industrial Operations, Engineering and Technology*
CGA	*Compressed Gas Association*
ETL 99-4	*Fire Protection Engineering Criteria & Technical Guidance – Emergency Lightning and Marking of Exits*

ANSI A13.1	*Scheme For the Identification of Piping Systems*
ANSI A14.1	*Ladders, Portable Wood, Safety Requirements for*
ANSI A14.2	*Safety Requirements for Portable Metal Ladders*
ANSI A14.3	*Ladders – Fixed – Safety Requirements*
ANSI A14.4	*Job – Made Wooden Ladders, Safety Requirements*
ANSI A14.5	*Ladders Portable Reinforced Plastic Safety Requirements*
ANSI A92.2	*Vehicle mounted elevating & Rotating Aerial Devices*
ANSI B11.10	*Metal Sawing Machines*
ANSI B11.9	*Safety Requirements For The Construction, Care, and Use of Grinding Machines*
ANSI B71.1	*Consumer Turf Care Operations – Equipment Walk-Behind Mowers and Ride-On Machines with Mowers*
ANSI Z41	*Personal Protection – Protective Footwear*
ANSI Z87.1	*Practice for Occupational and Educational Eye*
ANSI 89.1	*Industrial Head Protection*
ANSI 133.1	*Tree Care Operations – Pruning, Trimming, Repairing Maintaining and Removing Trees, and Cutting Brush – Safety Requirements*
ANSI Z358.1	*Emergency Eyewash and Shower Equipment*
ANSI Z359.1	*Safety Requirements for Personal Fall Arrest Systems, Sub Systems, and Components*
ANSI Z535.1	*Marking Physical Hazard Safety Color Code*
ANSI B7011600	*Accuracy Inspection of Metal Cutting Vertical Band Sawing Machines*
ANSI B701170	*Accuracy Inspection of Metal Cutting Horizontal Band Sawing Machines*
AS 1318	*Marking of Physical Hazards*
ASTM D120-95	*Specification for Rubber Insulating Gloves*
ASTM D178-98	*Specification For Rubber Insulating Matting*
ASTM D1051-95	*Specification for Rubber Insulating Sleeves*
UFC 3-600-02	*Operations and Maintenance: Inspection Testing, and Maintenance of Fire Protection System*
29 CFR 1910 Subpart D	*Walking – Working Surfaces*
29 CFR 1910 Subpart O	*Machinery and Machine Guarding*
29 CFR 1910.22	*General Requirements – Walking Work Surfaces*
29 CFR 1910.23	*Guarding Floor and Wall Opening and Holes*
29 CFR 1910.24	*Fixed Industrial Stairs*

29 CFR 1910.25 *Portable Wood Ladders*

29 CFR 1910.26 *Portable Metal Ladders*

29 CFR 1910.27 *Fixed Ladders*

29 CFR 1910.28 *Safety Requirements for Scaffolding*

29 CFR 1910.29 *Manually Propelled Mobile Ladder Stands & Scaffolds (towers)*

29 CFR 1910.30 *Other Working Surfaces*

29 CFR 1910.66 *Powered Platform For Building Maintenance*

29 CFR 1910.66 Appendix C *Personal Fall Arrest Systems*

29 CFR 1910.67 *Vehicle-Mounted Elevating and Rotating Work Platforms*

29 CFR 1910.94 *Ventilation*

29 CFR 1910.95 *Occupational Noise Exposure*

29 CFR 1910.106 *Flammable and Combustible Liquids*

29 CFR 1910.111 *Storage and Handling of Anhydrous Ammonia*

29 CFR 1910.132 *Personal Protective Equipment – General Requirements*

29 CFR 1910.133 *Eye and Face Protection*

29 CFR 1910.134 *Respiratory Protection*

29 CRF 1910.135 *Head Protection*

29 CFR 1910.136 *Occupational Foot Protection*

29 CFR 1910.141 *Sanitation*

29 CFR 1910.144 *Safety Color Code for Marking Physical Hazards*

29 CFR 1910.145 *Specifications for Accidents Prevention Signs and Tags*

29 CFR 1910.147 *The Control of Hazardous Energy (LOTO)*

29 CFR 1910.151 *Medical Services and First Aid*

29 CFR 1910.176 *Handling Materials – General*

29 CFR 1910.177 *Servicing Multi-Piece and Single Piece Rim Wheels*

29 CFR 1910.211 *Definition – Machinery & Machine Guarding*

29 CFR 1910.212 *Machinery and Machine Guarding, General Requirements for All Machines*

29 CFR 1910.213 *Woodworking Machinery Requirements*

29 CFR 1910.215 *Abrasive Wheel Machinery*

29 CFR 1910.217 *Mechanical Power Presses*

29 CFR 1910.217 Appendix D *Nonmandatory Supplementary Information*

29 CFR 1910.219 *Mechanical Power – Transmission Apparatus*

29 CFR 1910.243	*Guarding of Portable Powered Tools*
29 CFR 1910.263	*Bakery Equipment*
29 CFR 1910.268	*Telecommunication*
29 CFR 1910.303	*General Requirements – Electrical*
29 CFR 1910.304	*Wiring Design and Protection*
29 CFR 1910.305	*Wiring Methods, Components, and Equipment for General Use*
29 CFR 1910.333	*Selection and use of Work Practices – Electrical*
29 CFR 1910.1001	*Asbestos*
29 CFR 1910.1030	*Bloodborne Pathogens*
29 CFR1910.1200	*Hazard Communications*

29 CFR Part 1910 Subpart D (1910.21- 1910.30) *Walking Working Surfaces*

29 CFR Part 1910 Subpart E (1910.37) *Means of Egress – General*

29 CFR 1915.71	*Scaffold, Ladders and Other Working Surfaces*
29 CFR 1926.50	*Medical Services and First Aid*
29 CFR 1926.152	*Flammable and Combustible Liquids*
29 CFR 1926.441	*Batteries and Battery Charging*
29 CFR 1926.501	*Duty to Have Fall Protection*
29 CFR 1926.502	*Fall Protection Systems Criteria and Practices*
29 CFR 1926.550	*Cranes and Derricks*
29 CFR 1926.701	*Concrete and Masonry Construction*
29 CFR 1926.1002	*Protective Frames (roll-over protection structures, known as ROPS) for Wheel-Type Agricultural and Industrial Tractors Used In Construction*
Subpart J	*29 CFR 1910. 141 - General Environment Controls*
Subpart L	29 CFR 1926. 450 - *Safety Standard for Scaffolds Used in the Construction Industry*
Subpart N	*29 CFR 1910.176 - Handling Materials – General*
Subpart S	*29 CFR 1910.303 - Electrical – General Requirements*
Subpart S	*29 CFR 1910.333 - Selection and use of work Practices*
OSHA 3092	*Working Safely with Video Display Terminals*
OSHA 3127	*Occupational Exposure to Bloodborne Pathogens*
OSHA 3128	*Bloodborne Pathogens and Acute Care Facilities*
OSHA 3129	*Controlling Occupational Exposure to Bloodborne Pathogens in Dentistry*

OSHA 3130	*Occupational Exposure to Bloodborne Pathogens: Precuations forEmergency Responders*
OSHA 3131	*Bloodborne Pathogens and Long-Term Care Workers*
OSHA 3067	*Concepts & Techniques of Machine Safeguarding*
NFPA 10	*Portable Fire Extinguisher*
NFPA 12	*Carbon Dioxide Extinguishing System*
NFPA 12A	*Halon 1301, Fire Extinguishing System*
NFPA 13	*Installation of Sprinkler Systems*
NFPA 17	*Dry Chemical Extinguishing System*
NFPA 30	*Flammable and Combustible Liquids*
NFPA 70	*The National Electrical Code*
NFPA 70E	*Electrical Safety Requirements for Employee Workplace*
NFPA 91	*Exhaust Systems For Air Conveying of Vapors, Gases Mists, and Noncombustible Particulate Solids*
NFPA 96	*Ventilation Control and Fire Protection of Commercial Cooking Operations*
NFPA 24	*Installation of Private Fire Service Mains and Their Appurtenances*
NFPA 80	*Fire Doors and Fire Windows*
NFPA 101	*Life Safety Code*
NFPA 251	*Methods of Tests of Fire Endurance of Building Construction and Materials*
NFPA 1901	*Automotive Fire Apparatus*
NFPA 1914	*Testing Fire Department Aerial Devices*
NFPA 1931	*Design of and Design Verification Tests for Fire Dept Ground Ladders*
NFPA 1932	*Use, Maintenance and Service Testing of Fire Dept Ground Ladders*
NFPA 1962	*Standard For The Care, Use and Service Testing of Fire Hose Including Connections and Nozzles*
2000	*Emergency Response Guide Book*

Abbreviations & Acronyms

AC—Alternating Current

AED—Automated External Defibrillator

AFCESA—Air Force Civil Engineer Support Agency

AFETC—Air Force Education and Training Command

AFHCP—Air Force Hazard Communication Program

AFMC—Air Force Material Command

AFMOA—Air Force Medical Operations Agency

AFSC—Air Force Safety Center

AFI—Air Force Instruction

AFJI—Air Force Joint Instruction

AFMAN—Air Force Manual

AFOSH—Air Force Occupational Safety and Health

AFTO—Air Force Technical Order

AFVA—Air Force Visual Aid

ALARA—As Low As Reasonably Achievable

ANSI—American National Standards Institute

ASME—American Society of Mechanical Engineers

ASTM—American Society for Testing and Materials

BCE—Base Civil Engineering

BE—Bioenvironmental Engineering

BEE—Bioenvironmental Engineer

BTU—British Thermal Unit

C—Celsius

CE—Civil Engineering

CEF—Civil Engineering Fire Protection

CFR—Code of Federal Regulations

cm—Centimeter

CPR—Cardiopulmonary Resuscitation

CRT—Cathode Ray Tube

CO2—Carbon Dioxide

dB—Decibels

DBMS—Director of Medical Service

DC—Direct Current

DoD—Department of Defense

DOT—Department of Transportation

DRU—Direct Reporting Unit

EOD—Explosive Ordnance Disposal

F—Fahrenheit

FOA—Field Operating Agency

GFCI—Ground Fault Circuit Interrupter

GSA—General Services Adminstration

HQ—Headquarters

JSA—Job Safety Analysis

JSM—Joint Service Manual

kV—Kilovolt

kW—Kilowatt

LEL—Lower Explosive Limits

LN2 —Liquid Nitrogen

LOX—Liquid Oxygen

MAJCOM—Major Command

MilSPEC—Military Performance Specification

Mil-STD—Military Standard

MFH—Military Family Housing

MHE—Material Handling Equipment

MSDS—Material Safety Data Sheet

NATO—North Atlantic Treaty Organization

NEC—National Electrical Code

NFPA—National Fire Protection Association

NIOSH—National Institute for Occupational Safety and Health

NSC—National Safety Council

NSN—National Stock Number

OI—Operating Instruction

OH—Occupational Health

OJT—On-The-Job Training

OPR—Office of Primary Responsibility

ORM—Operational Risk Management

OSH—Occupational Safety and Health

OSHA—Occupational Safety and Health Administration

PDO—Publishing Distribution Office

PFAS—Personal Fall Arrest System

POL—Petroleum, Oils, and Lubricants

PPE—Personal Protective Equipment

psi—Pounds Per Square Inch

psig—Pounds Per Square Inch Guage

RAC—Risk Assessment Code

RF—Radiofrequency

RPIE—Real Property Installed Equipment

SG—Surgeon General

TOA—Table of Allowance

TO—Technical Order

UFC—Unified Facilities Criteria

UL—Underwriter's Laboratory

UN—United Nations

USAFSAM—US Air Force School of Aerospace Medicine

USAF—United States Air Force

US—United States

VDT—Video Display Terminal

Terms

Abrasive Wheel—A cutting tool made of abrasive grains held together by organic or inorganic bonding materials.

Automated External Defibrillator-—A device that analyzes the heart's rhythm and, if necessary, tells the user to deliver a shock to a victim of sudden cardiac arrest. This shock, called defibrillation, may help the heart to re-establish an effective rhythm of its own.

Actuating Mechanism—A pull rod, chain, and ring, push flag, or foot treadle used to activate the control valve of an emergency shower or eye wash unit.

Aerial Device—Any vehicle-mounted device, telescoping or articulating or both, which is used to elevate personnel to job sites above ground. These devices include extendible boom platforms, vertical towers, and a combination of the above.

Aerial Ladder—An aerial device consisting of a single or multiple-section extendible ladder.

Aisleway—An established path powered material handling equipment (or foot traffic) used inside a facility, such as aisleways in a supply warehouse.

Anchorage—See Fixed Anchorage.

Anti-Repeat or One Stroke Only—A system or device that may be part of the clutch and (or) brake control mechanism and limits the press to a single stroke when the tripping control is held in an operational position.

Approved Portable Fire Extinguishers—Extinguishers procured to a military specification for specific Air Force needs, or approved by a nationally recognized agency such as Underwriter's Laboratories, Inc., Factory Mutual Laboratory, Bureau of Mines, Department of Interior, Department of Transportation (DOT), or US Coast Guard.

Approved—Listed and approved by Underwriter's Laboratories, Inc., Factory Mutual Engineering Corporation, The Bureau of Mines, National Institute for Occupational Safety and Health, The American National Standards Institute, The National Fire Protection Association, or other nationally recognized agencies which list, approve, test, or develop specifications for equipment to meet fire protection, health, or safety requirements.

Articulating Boom Platform—An aerial device with two or more hinged boom sections.

Assembly Facilities—Facilities or portions of facilities used for gathering together 50 or more persons for such purposes as deliberations, worship, entertainment, eating, drinking, amusement, or awaiting transportation.

Automatic Carbon Dioxide Fire Suppression System—An automatic or manually activated fire suppression system that uses carbon dioxide, a colorless, odorless, electrically non-conductive gas, as its extinguishing agent.

Automatic Fire Detection System—A system that employs heat, smoke, and flame detectors, or a combination of these, to detect, announce, and report the presence of fire. The system includes features to manually actuate the system and transmit the alarm to the fire department.

Automatic Fire Suppression System—A system which automatically or manually discharges fire extinguishing agent to suppress a fire.

Back Support Belt—A belt that is designed to provide lower lumbar and abdominal muscle support when lifting. There is no definitive proof that back support belts serve any protective function therefore the Air Force does not currently recognize back support belts as personal protective equipment. Back support belts must not be worn without supervisory approval and proper training in safe lifting techniques. They will not be relied upon solely to protect the back from injury. Back support belts should be unfastened when the individual is not presently involved in a lifting motion, to prevent the possibility of muscle atrophy from prolonged usage.

Battery-Operated Emergency Lighting Units—Any battery-operated lighting unit which automatically switches on when a power failure occurs.

Bearer—A horizontal part of a scaffold on which the platform rests and which may be held in place by ledgers.

Bloodborne Pathogens—Bloodborne pathogens are pathogenic microorganisms that are present in human blood and can cause disease in humans. These pathogens include, but are not limited to, hepatitis B virus (HBV) and human immune deficiency virus (HIV). Universal precautions MUST be observed. Infection control requires the employer and employee to assume that all human blood and specified human body fluids are infectious for HIV, HBV, and other bloodborne pathogens. Where differentiation of types of body fluids is difficult, all body fluids are to be considered as potentially infectious. Any person in the performance of their duties who could reasonably be expected to come in contact with blood or other potentially infectious materials must be trained according to OSHA 1910.1030.

Body Belt—See Suspension Belt.

Body and (or) Hand Protection—Any glove, finger guard, arm protector, apron, bib, or garment designed to protect the body, arms, hands, or fingers from contamination or injury due to absorption or physical contact.

Body Harness—A design of simple or compound straps that may be secured about the wearer so the stopping forces are distributed over the thighs, buttocks, chest, and shoulders, or any combination thereof. Provisions for attaching a lanyard are included and will be centered in the back near shoulder level or above the head.

Bonding—The interconnecting of metal raceways, equipment cabinets, shields, etc., to the facility equipment system to eliminate the electrical potential of the individual pieces of equipment relative to each other.

Brace—A tie that holds one scaffold part in a fixed place with respect to another part.

Breakthrough Time—The time required for a specific chemical to permeate through a particular brand of protective clothing or equipment.

Buddy System—Two people, each responsible for the other's safety, are present in a hazardous situation. There are two types of buddy systems. One involves both persons subjected to the same hazard at the same time and each assures the other's well-being and assists if a mishap occurs. The other system would be where one person is exposed to the hazard while the other is not and acts as an observer.

Cane—See Hook.

Cardiopulmonary Resuscitation (CPR)—Emergency first aid treatment involving mouth-to-mouth resuscitation and closed chest heart massage.

Carrying Methods—Method of carrying or transporting equipment.

Cathode Ray Tube (CRT)—A sealed evacuated glass tube containing an electron source and a phosphorous face often used to provide a visual image display. A television tube is a common example.

Chemical Protective Clothing—Chemical protective clothing is intended to isolate the worker from contact with chemicals. It may include items such as: hoods, face shields, chemical goggles, jackets, coats, aprons, bib overalls, coveralls, splash suits, boots, shoe covers, and full body encapsulating suits.

Chuck—A clamp that holds a tool or material being worked in or on a machine.

Class A Fire—Fires involving ordinary combustible materials such as wood, cloth, paper, rubber, and many plastics.

Class B Fire—Fires involving flammable liquids, grease, and gases.

Class C Fire—Fires involving energized electrical equipment.

Class D Fire—Fires involving combustible metals such as magnesium, titanium, zirconium, sodium, and potassium.

Climbing Ladder—A separate or built-in ladder with rungs that are spaced at equal distance and are attached to a scaffold or platform so people can climb and descend.

Clutch—A device used to connect and disconnect a driving and driven part of a mechanism that, when connected, transmits rotary motion from the driving to the driven member.

Combination Unit (Emergency Shower and Eyewash)—A unit combining a shower with an eye and

face wash or eyewash or with a drench hose, or both.

Combustible Liquid—A liquid having a flashpoint at or above 100 degrees F (37.80 Celsius [C]).

Commercial Cooking Facilities—Facilities such as clubs, dining halls, snackbars, cafeterias, and other places of assembly where the facility or a portion of it is devoted to the preparation of food served to the public.

Confined Space—A space that is large enough and configured so that a worker can bodily enter and perform assigned work; and has limited or restricted means for entry or exit (for example: tanks, vessels, silos, storage bins, hoppers, vaults, manholes, and pits are spaces that may have limited means of entry); and is not designed for continuous human occupancy.

Coolant—Oil or other fluid that draws off heat by circulating through a machine or by bathing a mechanical part, such as oil that is applied to a metal cutting operation to dissipate the heat.

Corrective Lens—A lens manufactured to the wearer's individual corrective prescription.

Corrosive—Any substance that burns, injuriously irritates, or destructively attacks organic tissues.

Coupler—A device for locking together the parts of a tubular metal scaffold; designed and used to safely support the maximum intended loads.

Deceleration Device—Any mechanism, such as a rope-grab, rip-stitch lanyard, or specifically woven lanyard, which serves to dissipate a substantial amount of energy during a fall arrest, or otherwise limits the energy imposed on an employee during fall arrest.

Deceleration Distance—The vertical distance between the user's fall arrest attachment at the onset of fall arrest forces during a fall, and after the fall arrest attachment comes to a complete stop.

Design Working Load—The maximum intended load, being the total of all loads including the weight of the workers, materials, equipment, and platform.

Die—Tooling used in a press for cutting or forming material. Upper and lower dies make a complete set.

Dog—A device for gripping or holding material or a machine component in place.

Dollie—Moves heavy loads without unsafe lifting or hand-carry.

Dropline—A vertical line attached to a fixed anchorage to which a lanyard is affixed.

Dry or Wet Chemical Fire Suppression System—An automatic or manually activated fire suppression system normally installed over cooking equipment and dipping vats.

Education—The process of imparting knowledge or skill through systematic instruction. It does not require formal classroom instruction.

Electrical Worker Personal Protection Devices—Equipment designed to protect against electrical shock while working on electrically energized circuits. May include rubber insulating matting, blankets, line hose, gloves, sleeves, rain gear, footwear, safety belts, lanyards and lifelines, and special hand tools.

Emergency Shower Head—A high-volume spray head specially designed for use on an emergency shower.

Emergency Shower—A unit that cascades water over the entire body.

Energized—A circuit electrically connected to a source of potential difference or an electrical charge.

Energy Isolating Device—A physical device that prevents the transmission or release of energy including, but not limited to, the following: a manually operated electrical circuit breaker, a disconnect switch, a slide gate, a slip blind, a line valve, blocks, and similar devices with a visible indication of the position of the device. Push buttons, selector switches, and other control circuit type devices are not energy isolating devices.

Energy Source—Any electrical, mechanical, hydraulic, pneumatic, chemical, nuclear, thermal, or other energy source that could cause injury to personnel.

Equipment Ground—Connection to ground from one or more of the non-current carrying metal parts of the apparatus or equipment.

Equivalent—An alternative design or feature which will give an equal degree or factor of safety.

Exit Access—Exit access is that portion of a means of egress that leads to an exit.

Extendible Boom Platform—An aerial device (except ladders) with a telescopic or extendible boom. Telescopic derricks with personnel platform attachments will be considered to be extendible boom platforms when used with a personnel platform.

Extension Ladder—A nonself-supporting portable ladder, adjustable in length. It consists of two or more sections traveling in guides or brackets arranged to permit length adjustment. Its size is designated by the sum of the lengths of the sections measured along the side rails.

Eye and Face Protectors—This equipment includes spectacles and goggles (with and without lenses), face shields, and hoods.

Eye and Face Wash Unit—A unit used to irrigate and flush both the face and the eyes.

Eye Hazard Area or Task—A location or task where liquids, vapors, dusts, particles, light, heat, or other situations exist that require eye protective devices and extra precautions by personnel. Examples of eye hazards are splashes or mists from fuels, corrosive or toxic chemicals or other liquids; particles of metals from grinding, cutting, or welding; dusts; and harmful levels of radiant light from welding, ultraviolet, laser or other sources.

Eyewash Bottle—A squeeze type or plunger-actuated bottle which supplements permanent units, portable units, or both.

Eyewash Unit—A unit used to irrigate and flush the eyes only.

Face Shield—A protective device worn in front of the eyes and a portion of, or all of, the face.

Facility Ground—A grounding system of 10 ohms or less that the entire third wire ground system, metal raceways, conduits, generators, transformers, and other equipment within the facility are connected to.

Feather Board—An angular board with multiple parallel saw cuts that is used as a side and top hold-down to prevent kickbacks and keep hands away from moving blades and cutters.

Fence (Woodworking Machinery)—A device installed for the purpose of acting as a stop and guide for sawing materials. Also called rip fence.

Filler Piece—A narrow strip of wood with cleats on both ends that permits ripping of narrow material on circular saws without removal of guard.

Fire Hydrant—A valved outlet connected to a water distribution system designed to permit the transfer of water from the water distribution system to a fire fighting vehicle or hose streams.

Fire Protection Authority—The senior individual assigned responsibility for managing the installation fire prevention and protection program or their authorized representative.

Fire Protection—Sprinkler systems and other fire fighting or fire protection equipment or systems.

Fixed Anchorage—A secure point of attachment, not part of the work surface, for droplines, lifelines, or lanyards. An approved fixed anchorage will be capable of supporting minimum deadweight of 5,000 pounds (per person).

Flammable Liquid—A liquid having a flashpoint below 100 degrees F (37.80 C) closed cup test and having a vapor pressure not exceeding 40 pounds psi at 100 degrees F (37.80 C).

Flange—A collar, disk, or plate used to hold an abrasive wheel in position on a rotating shaft.

Flashpoint—The minimum temperature at which a liquid gives off vapor within a test vessel in sufficient concentration to form an ignitable mixture with air near the surface of the liquid.

Flight Line Fire Extinguisher—A wheeled portable fire extinguisher provided for the protection of aircraft. Included are various sizes of Halon 1211, carbon dioxide, and dry chemical extinguishers.

Floor—The interior walking and walking surface upon which machinery, aisles, and passageways are located. This does not include platforms, walkways, or catwalks.

Floor Hole—An opening measuring less than 12 inches but more than 1 inch in its least dimension, in any floor, platform, pavement, or yard, through which materials but not persons may fall; such as a belt hole, pipe opening, or slot opening.

Floor Opening—An opening measuring 12 inches or more in its least dimension, in any floor, platform, pavement, or yard through which persons may fall; such as a hatchway, stair or ladder opening, pit, or large manhole. Floor openings occupied by elevators, dumb waiters, conveyors, machinery, or containers are excluded from this subpart.

Foot Protector—A product designed to protect the foot from injury due to moderate impact; abrasions; cuts, burns, or corrosive, caustic, or toxic materials; freezing; absorption; or dampness.

Free Fall distance—The vertical displacement of the fall arrest attachment point on the employee's body harness between onset of the fall and just before the system begins to apply force to arrest the fall.

Functional Manager—The senior operating official at all levels exercising managerial control of an activity or operation. This individual usually can acquire and commit resources for the abatement of occupational safety and health hazards. Functional managers are designated by MAJCOM, DRU, FOA, or installation commanders.

Goggle—A device which protects the eyes and eye sockets. They have contour-shaped eyecups or full facial contact, glass or plastic lenses, and are held in place by a headband or other suitable means.

Graphics—Elements (words, emblems, colors, symbols, and other visual devices) of a sign or tag used to convey a warning, caution, danger, or serve as a notice of an existing hazard.

Grounding Stick—A device used to ground electronic circuits and bleed off voltage or static electricity.

Grounding System—Complete ground circuit for any equipment, facility, or system.

Guardrail—A vertical guard built along exposed sides of stairs and platforms to stop people from falling. The top part of a guardrail can serve as a handrail.

Halon 1301 Fire Suppression System—An automatic or manually activated fire suppression system using Halon 1301, a colorless, odorless, electrically non-conductive gaseous agent.

Hand-Held Drench Hose—A flexible hose connected to a water supply and used to irrigate and flush eyes, face, and body areas.

Handrail—Single bar or pipe supported on brackets attached to a wall or partition to provide a handhold for people using stairs to keep them from falling or tripping.

Hazard Identification—For the purpose of this standard, hazard identification refers to signs or tags that warn, caution, or inform personnel of a hazardous condition.

Hazardous Areas—Areas where combustible vapors, dusts, fibers, etc., may accumulate in sufficient concentrations to create the possibility of being ignited. These areas are defined in National Fire Protection Association (NFPA) 70 *National Electrical Code (NEC)*; or locations where chemical, physical, radiation, electromagnetic, or other hazards exist in such a manner that personnel safety or health may be jeopardized.

Hazardous Material—A substance which is explosive, flammable, poisonous, corrosive, oxidizing, irritating, or otherwise harmful and may cause personal injury or harm.

Head Protection—A device that is worn to provide protection to employees when there is the potential for injury to the head from impact and penetration from flying, falling, or stationary objects or limited electrical shock, heat, or burn. Protection includes a suitable chin strap and harness to secure the helmet to the head.

High Voltage—Any circuit, set of conductors, or exposed point of contact in which the potential to ground or between conductors is 600 volts nominal or greater.

Hook with Hardwood Handle or Cane—A non-conductive device used to pull an individual away from an energized circuit.

Inclined Ladder or "Ships' Ladder"—A stairway installed at an angle greater than 50 degrees. All stairway criteria, except the angle of rise, applies to inclined ladders.

In-Running Nip Point—A hazardous condition created by moving or rotating objects that move toward each other.

Insulated Aerial Device—An aerial device designed for work near energized electrical lines and apparatus.

Insulated Fuse Puller—A non-conductive device used to remove fuses from circuit boxes.

Interlock—A device that prevents operation of the control that starts a machine in motion until a condition is met, such as the guard being in place.

Ionizing Radiation—Electromagnetic or particulate radiation, which may cause ionization within the cells or tissues of the body and which has sufficient energy to produce direct ionization in passage through a substance. Examples of ionizing radiation are X-rays, gamma ray, alpha particles, and beta particles.

Irritant—Substances that when blown or splashed onto the body or into the eyes will not normally cause lasting or permanent damage, but will definitely irritate the skin or eyes.

Isolation—Positively preventing any unwanted form of energy (or other agent with a serious potential for hazard) from contacting a worker or operation through the use of blanking, double block and bleed, or

lockout and (or) tagout.

Job Safety Analysis (JSA)—Procedure used by supervisors and employees to assess the hazards associated with a work procedure and determine the safest, most efficient means of accomplishing a given task. The use of PPE is sometimes the best method of mitigating a particular hazard. Specific documentation is required. The prescribing directives for conducting JSAs are AFIs 91-202, 91-301, and OSHA Standard 29 CFR 1910.132.

Kickback—The tendency of blades and cutters to force material being milled up and back toward the operator.

Ladder Cage—An enclosure that encircles the climbing space and is fastened to the side rails of the ladder or structure.

Ladder Stand—A mobile fixed size, self-support ladder that is made up of a wide flat tread ladder in the form of stairs. The ladder stand may include handrails.

Ladder—Two side rails joined at regular intervals by crosspieces called steps, rungs, or cleats.

Lanyard—A flexible line used to secure a wearer of a body harness to a dropline, lifeline, or fixed anchorage.

Ledger (Stringer)—A horizontal part on a scaffold which extends from post to post which supports the bearer forming a tie between the posts.

Legend—A legend is any lettered identification on a piping system. The legend will identify the contents by complete names or by generally recognized abbreviations, symbols, letters, numerals, or combinations thereof.

Lifeline—A component of a flexible line for connection to an anchorage connector at one end to hang vertically (vertical lifeline), or for connection to anchorages or anchorage connectors at both ends to span horizontally (horizontal lifeline).

Liquid Nitrogen Fire Suppression System—An automatic or manually activated fire suppression system using $LN_{2,}$ which displaces oxygen to extinguish a fire.

Lockout and (or) Tagout Program—A program consisting of energy control procedures, staff training, and periodic inspections to ensure that, before a staff member performs any servicing or maintenance on a machine or equipment where the unexpected energizing, start-up, or release of stored energy could occur and cause injury. Prior to service the machine or equipment shall be isolated from the energy source and rendered inoperative.

Lockout Device—A device that utilizes a lock and key to hold an energy isolating device in the safe position for the purpose of protecting personnel.

Maximum Intended Load—The total weight of all loads including the weight of workers, materials, and scaffolding that is anticipated during a job.

May—Indicates an acceptable or satisfactory method of accomplishment.

Midrail—A rail approximately midway between the guardrail and platform and secured to the uprights erected along the exposed sides and ends of platforms.

Mishap Prevention Sign—A visual display made of some durable material (metal, wood, rigid plastic) intended to caution, warn, or provide information.

Mishap Prevention Tag—A visual display, intended to caution or warn, made of materials which will withstand the environmental conditions expected in the workplace. Tags will be securely attached in an appropriate manner to ensure visibility, as close to the machine or equipment as possible.

Mobile Scaffold (Tower)—A light, medium, or heavy duty scaffold that is mounted on casters or wheels.

Mobile Unit—A combination of an aerial device, its vehicle, and related equipment.

Mobile Work Platform—A scaffold that provides a work level, one or more frames high, on casters or wheels, with bracing across or diagonally from the platform to the posts.

Multiple-Spray Shower Unit—A unit using more than a single head and delivering water from more than one direction.

Musculoskeletal- Disorder —Refers to conditions that involve the nerves, tendons, muscles, and supporting structures of the body.

Nonionizing Radiation—Electromagnetic radiation which does not have sufficient energy to produce direct radiation when passing through a substance. Examples include radiofrequency (RF) radiation, visible light, infrared, and ultraviolet.

Nose, Nosing—That portion of a tread projecting beyond the face of the riser immediately below.

Notice of Hazard—A written warning of a condition, procedure, or practice which constitutes an occupational hazard. As used in the context of this standard, Notice of Hazard refers to AF Form 1118, **Notice of Hazard** (refer to AFI 91-301).

Occupational Exposure to Ionizing Radiation—An exposure incurred as a result of an individual's employment or duties. Occupational exposure shall not be deemed to include the exposure of an individual to sources of ionizing radiation for the purpose of medical diagnosis or therapy.

Open Riser—The air space between the treads of stairs.

Oxygen-Deficient Atmosphere—An atmosphere containing less than 19.5 percent oxygen by volume.

Oxygen-Enriched Atmosphere—An atmosphere containing more than 23.5 percent oxygen by volume.

Passageway or Walkway—A path for pedestrian and non-powered material handling equipment. For the purpose of this standard, passageway is used for interior and walkway for exterior paths.

Peripheral Guard—Commonly referred to as a tongue guard. This adjustable guard is installed on machines (grinding machine) where the operator is in front of the grinding surface during the operation.

Periphery—The outer circumference of the wheel.

Permanent Eyewash and Shower Units—Units connected to a source of potable water by permanent plumbing.

Personal Fall Arrest System—An assembly of components and subsystems used to arrest a person in a fall from a working height.

Physical Hazard and Obstruction—Specific hazards of such nature that failure to identify them may lead to accidental injury to workers or property damage.

Pinch Point—Any point other than the point of operation where it is possible for a part of a person's body or clothing to be caught between moving parts.

Piping Systems—Any pipes or conduit used for conveying gases, liquids, or semi-liquids, except those carrying solids in air or gas. Valves, buried piping fittings, and operating accessories are specifically excluded from application of warning colors.

Pitch—The angle at which the fixed ladder is inclined against a structure or piece of equipment.

Plano—A lens that does not incorporate correction.

Platform—A walking or working surface for persons, elevated above the surrounding floor or ground (such as a balcony or landing) or a personnel carrying device (basket or bucket) which is a component of a mobile unit.

Ploughing—A variant of plow.

Point of Operation—The areas of a machine where cutting, shearing, forming, assembling, etc., takes place.

Portable Fire Extinguishers—Manually operated, hand-held, or wheeled extinguishers containing a fire extinguishing agent with a means to discharge the agent and direct it onto a fire.

Position Belt—Belt fit around the employee's waist and are attached (usually in the back) to a lanyard and then to the anchor.

Powder-Actuated Tools—Tools, such as ramsets, where cartridge-type explosives are the source of power.

Power Transmission Apparatus—Machinery components, including gears, cams, shafts, pulleys, belts, and rods, which transmit energy and motion from the source of power to the point of operation.

Primary Warning Color—This color appears as a circular band on piping systems and identifies a material which is classified by its primary hazard.

Protective Materials—Materials used for the express purpose of preventing or minimizing the hazards of dangerous materials. This group includes protective materials for purposes other than for fire protection.

Push Block—A block of wood having a handle and shoulder at the rear end that is used for pushing short lengths of material over revolving cutters.

Push Stick—A strip of wood with a notch cut into one end that is used to push short lengths of material through saws or other cutting operations.

Qualified Person—A person who is trained to recognize the hazards of an operation and how to evaluate those anticipated hazards. Examples of qualified persons include task-qualified ground safety, fire, and health personnel, personnel trained and certified for a particular task, permit issuing authorities, etc.

Rated Line Voltage—The manufacturer's recommended safe working line voltage.

Riser—The upright part of a step at the back of a lower tread and near the leading edge of the next higher tread.

Rise—The vertical distance from the top of a tread to the top of the next higher tread.

Rope Grab—A deceleration device which travels on a lifeline and automatically frictionally engages the lifeline and locks so as to arrest the fall of an employee. A rope grab usually employs the principle of inertial locking, cam or lever locking, or both.

Runner (Scaffolding)—The lengthwise horizontal bracing or bearing members.

Runway—A passageway for persons, elevated above the floor or ground level, such as a foot walk along shafting or a walkway between buildings. They are sometimes called catwalks.

Safe Materials—Materials involving little or no hazard to life or property. They include materials at low pressure and temperatures; those that are not toxic or poisonous; and those that will not produce fires or explosions.

Safety Climbing Device (Ladder)—A device, other than a cage, designed to limit falling distance. It may incorporate such features as life belts, friction brakes, or sliding attachments.

Safety Observer—A worker who is trained in CPR and equipment turn-off procedures and who is responsible for administering immediate assistance to a technician in the event of an emergency (the safety observer may be the supervisor).

Scaffold—Any temporary raised platform and all of the necessary vertical, diagonal, and horizontal parts used for supporting workers and materials or both, (also known as a scaffold tower).

Secondary Warning Color—This color appears as arrows (or triangles) on piping systems and identifies a material with a second hazard distinctly different from that indicated by its primary color.

Sectional Ladder—A non-self-supporting portable ladder, nonadjustable in length, consisting of two or more sections constructed so it functions as a single ladder. Its size is designated by the overall length of the assembled sections.

Self-Contained Emergency Shower or Eyewash Unit—A unit that must be refilled or replaced after use and may be portable or fastened to a supporting structure.

Self-Retracting Lifeline and (or) Lanyard—A deceleration device which contains a drum-wound line which may be slowly extracted from, or retracted onto, the drum under slight tension during normal employee movement and which, after onset of a fall, automatically locks the drum and arrests the fall.

Shall—Indicates a mandatory requirement.

Shear Point—The immediate area where two or more machine elements are in close contact, creating a shearing action.

Shelf Life (Abrasive Wheel)—Period of time that an abrasive wheel can be stored and safely returned to service.

Shield—A transparent guard supported without the aid of the operator. Its function is to protect the eyes.

Should—Indicates a preferred method of accomplishment.

Sideshield—A device of metal or plastic (or both) or other material, hinged or fixed firmly to the spectacle to protect the eye from side exposure.

Single Ladder—A freestanding portable ladder, nonadjustable in length, consisting of but one section. Its size is designated by the overall length of the side rail.

Snagging—Grinding which removes relatively large amounts of material without regard to close tolerances or surface finish requirements.

Spectacle, Safety—A device patterned after conventional type spectacle eyewear but of more substantial construction. They may be equipped with sideshields. The lenses can be plano- or corrective-protective.

They may be made of clear or absorptive filter glass or plastic.

Spindle—A rotating or fixed shaft-like member mounted in bearings and connected to the drive mechanism. A device for holding the work piece or a cutting tool is mounted on one or both ends.

Spreader—A curved piece of steel mounted behind a saw blade that prevents internal stresses within wood from clamping down on the saw blade.

Stairs—A series of steps and landings with three or more risers. Stairs may lead users from one level or floor to another, to platforms, pits, boiler rooms, crossovers, or around machinery, tanks, and other equipment.

Standpipe and Hose System—An arrangement of piping, valves, hose connections, and allied equipment installed in a facility so water can be discharged through a hose and nozzle for immediate fire fighting by trained fire fighters or building occupants.

Stay-Open Valve—A valve that will remain in the open position and continue to deliver water until manually closed (as part of an emergency shower or eyewash unit.)

Stepladder—A self-supporting portable ladder, nonadjustable in length, having flat steps and a hinged back. Its size is designated by the overall length of the ladder measured along the front edge of the side rails.

Step—The crosspiece of a ladder on which a person may step, also called a rung or cleat. Also means a combination of risers and treads which may be a part of a stair.

Stroboscopic Effect—The potential for fluorescent lighting to create the appearance that moving, rotating, or vibrating objects are stationary.

Suspension Belt—Design of simple or compound straps that may be secured about the wearer's body, usually at the waist or buttocks, as an independent work support. These are commonly referred to as saddle belts or tree trimmer's belts. Suspension belts do not provide fall protection and are not designed for use as a personal fall arrest system.

Symbol—A letter, picture, figure, or other character or mark (or a combination thereof) used to identify a hazard.

Tagout Device—A mishap prevention tag that is capable of being securely attached and that, for the purpose of protecting personnel, forbids the operation of an energy isolating device and identifies the applying individual or authority who has control of the procedure.

Tail Stock—The adjustable or sliding heads of lathes.

Toeboard—A barrier, secured along the sides and ends of a platform, to prevent material from falling from the scaffold platform.

Tongue Guard—See Peripheral Guard.

Toxic Material—A material which causes an adverse physiological response in the human body.

Training—The process of making an individual proficient through instruction and hands-on practice in the operation of equipment or processes that is expected to be used in the performance of assigned duties.

Tread Width—The horizontal distance from the front to the back of tread including nosing.

Tread—The horizontal part of a step.

Tube and Coupler Scaffold—A scaffold that is made up of tubing used as posts, bearers, braces, ties, runners, base supporting posts, and uprights that serve to join the various members. This type of scaffold is normally used in fixed locations.

Tubular Welded Frame Scaffold—A sectional, panel, or frame metal scaffold mainly built of prefabricated welded sections. This scaffold consists of posts and bearers with intermediate connecting parts and is braced with diagonal or cross braces.

Tubular Welded Sectional Folding Scaffold—A sectional, folding metal scaffold either designed as a ladder frame or inside stairway. It is built of prefabricated welded sections, which consist of end frames, platform frame, inside inclined stairway frame and braces, or hinged connected diagonal and horizontal braces. It can be folded into a flat package when the scaffold is not in use.

Vehicle—Any carrier that is not manually propelled. A vehicle is a stable support for the aerial device.

Vertical Tower—An aerial device designed to elevate a platform on a vertical axis.

Wheel, Buffing—A wheel made of disks of felt, linen, or canvas. The cutting surface is coated with rouge, tripoli, or other mildly abrasive substances.

Wheel, Inorganic—A wheel bonded by inorganic material such as clay, glass, porcelain, sodium silicate, magnesium oxychloride, or metal. Those bonded with ceramic materials are referred to as a vitrified bonded wheel.

Wheel, Organic—A wheel bonded by an organic material such as resin, rubber, shellac, or other similar bonding agent.

Wheel, Polishing—A wheel made of wood covered with leather or disks of canvas or similar material stitched together with a coat of emery or other abrasive glued to the wheel.

Wheel, Reinforced—A type of organic wheel that has webbing, fabric, or filament that provides resistance to complete breakage if the wheel becomes cracked or damaged.

Will—Is also used to indicate a mandatory requirement and in addition is used to express a declaration of intent, probability, or determination.

Wire Brush—A wheel made of varying protruding wires of different thickness, all attached to a central core.

Wire Rope—A rope composed of steel wires, strands, and a core. The individual wires are cold drawn to predetermined size and breaking loads according to use. They are then helically laid or formed around the core, which may be sisal or synthetic fiber, a metallic strand, or an independent wire rope. The size, number, and arrangement of wires, the number of strands, the lay, and the type of core in a rope are determined by the service for which the rope is to be used.

Work Level—A raised platform, used for supporting workers and their materials, made up of the necessary vertical, horizontal, and diagonal braces, guardrails, and ladder for access to the work platform.